Zachodniopomorski
Uniwersytet Technologiczny
w Szczecinie

BALTICNET
PLASMATEC

KompetenznetzeDeutschland
networking for innovation

Plasma Sources

PhD Marcin Hołub

Wydział
Elektryczny

Summer School, Greifswald, 19th August 2010

Lecture outline

- Introduction
- Plasma sources – low pressure and one atmosphere pressure systems
- Typical reactor configurations
- Plasma reactor as electric load – equivalent circuit
- Power supply system configurations
- Efficiency and power measurement systems and circuits
- Summary

Lecture outline

- Introduction
- Plasma sources – low pressure and one atmosphere pressure systems
- Typical reactor configurations
- Plasma reactor as electric load – equivalent circuit
- Power supply system configurations
- Efficiency and power measurement systems and circuits
- Summary

Introduction

Who am I –

- electrical engineer
- working with plasma systems for 10 years
- specialize in power electronics
- vice dean of Electrical Engineering Department
- member of the board of the BalticNet – PlasmaTec network

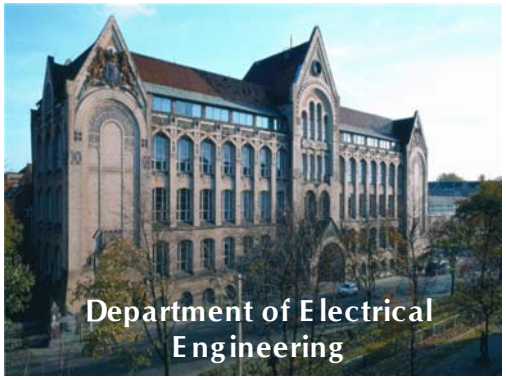

WPUT in figures:

- 10 departments
- 9 institutes
- 15 389 students
- About 1100 academic teachers
- 32 fields of study

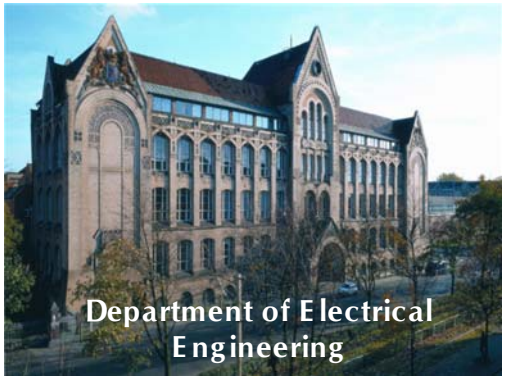

Department of Electrical Engineering:

- Students: 1 421
- Teachers: 80

Introduction

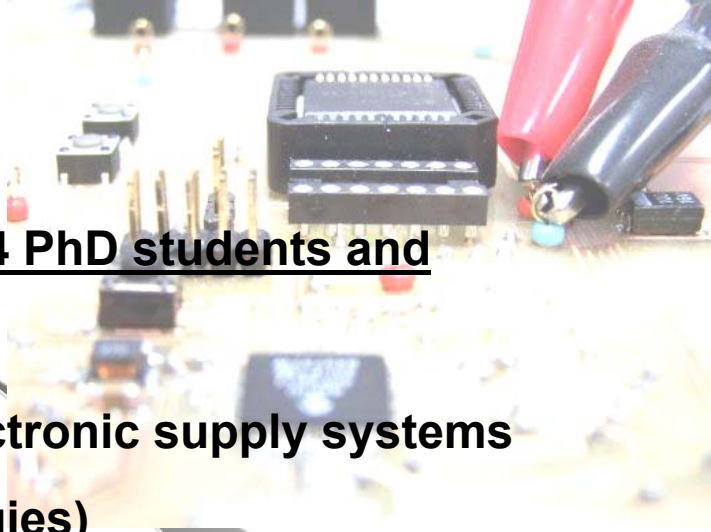

Our competences (lab now includes 2 doctors, 4 PhD students and technical staff):

- **14 years of experience considering power electronic supply systems for plasma technology (many different topologies)**
- **Design, numerical and experimental analysis of power electronic devices, prototype construction**
- **Design and construction of supply systems for high-power UV systems - (up to 20kW)**
- **Testing and expertise of power electronic devices**
- **Control and measurement systems for power electronics**

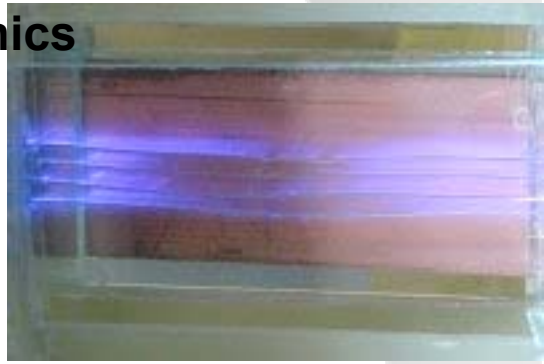

Introduction

Power electronic converters lab:

- **173 m^2 fully modernised and equipped**
- **2 000 000 PLN INTERREG III A project (75% refinanced)**
- **Finest equipment:**
  - **GHz oscilloscopes**
  - **iCCD Camera**
  - **Thermacam**
  - **Power analyzers**
  - **HV/HF current and voltage measurement**

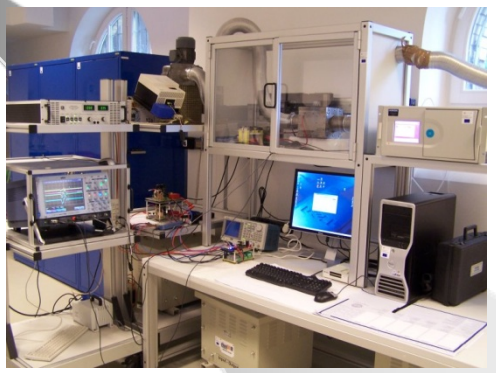

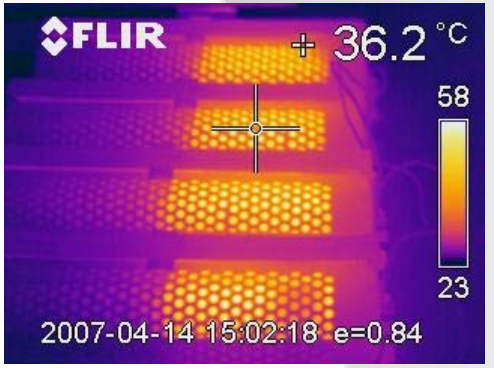

interreg
POLSKA 2004-2006

Zachodniopomorski Uniwersytet Technologiczny w Szczecinie

BALTICNET PLASMATEC

Wydział Elektryczny

www.we.zut.edu.pl

Lecture outline

- Introduction
- Plasma sources – low pressure and one atmosphere pressure systems
- Typical reactor configurations
- Plasma reactor as electric load – equivalent circuit
- Power supply system configurations
- Efficiency and power measurement systems and circuits
- Summary

Plasma sources – low pressure and one atmosphere pressure systems

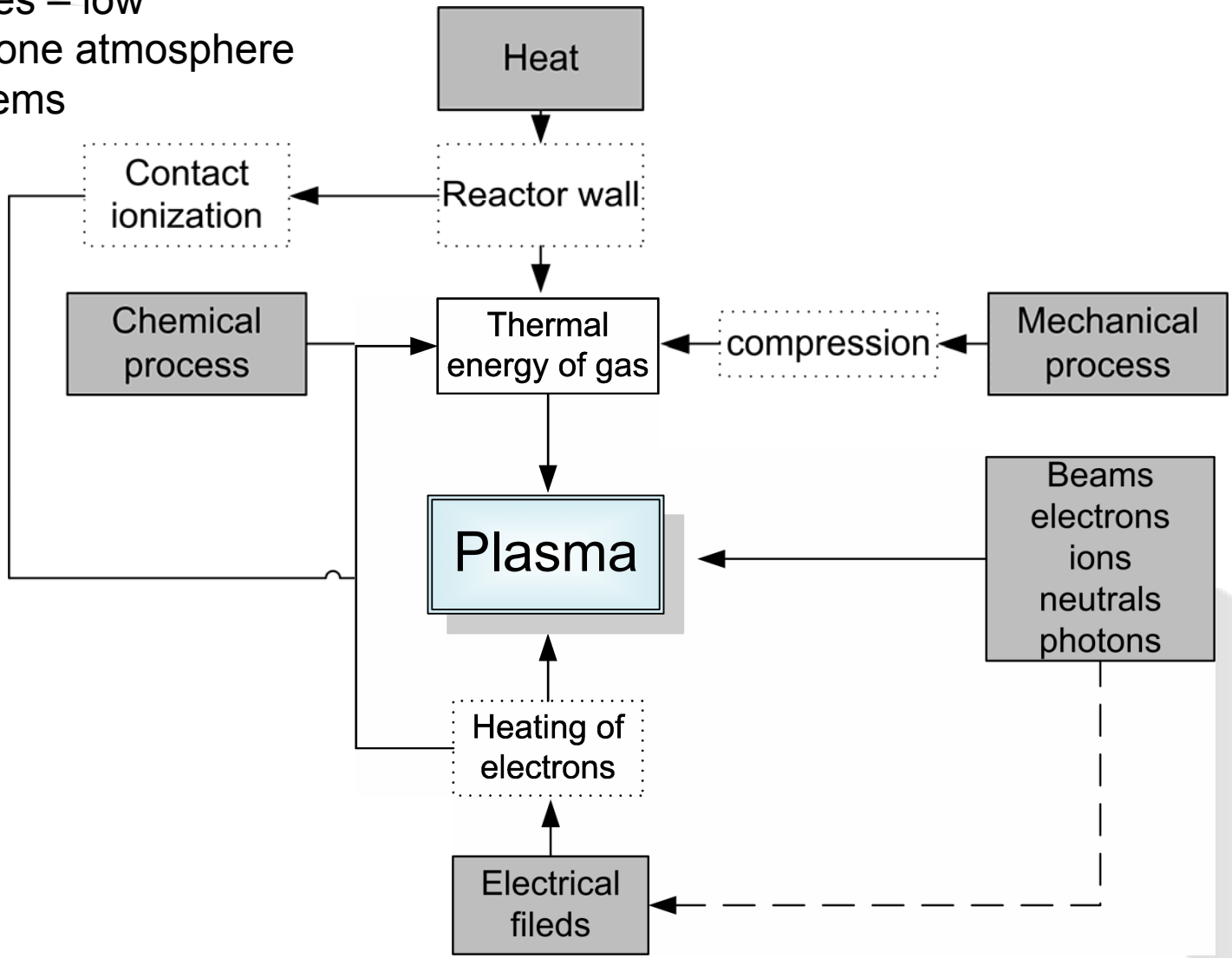

Source: H Conrads M Schmidt „Plasma generation and plasma sources”, Plasma sources sci. And techn. 9 (2000), pp. 441-454

Plasma sources – low pressure and one atmosphere pressure systems

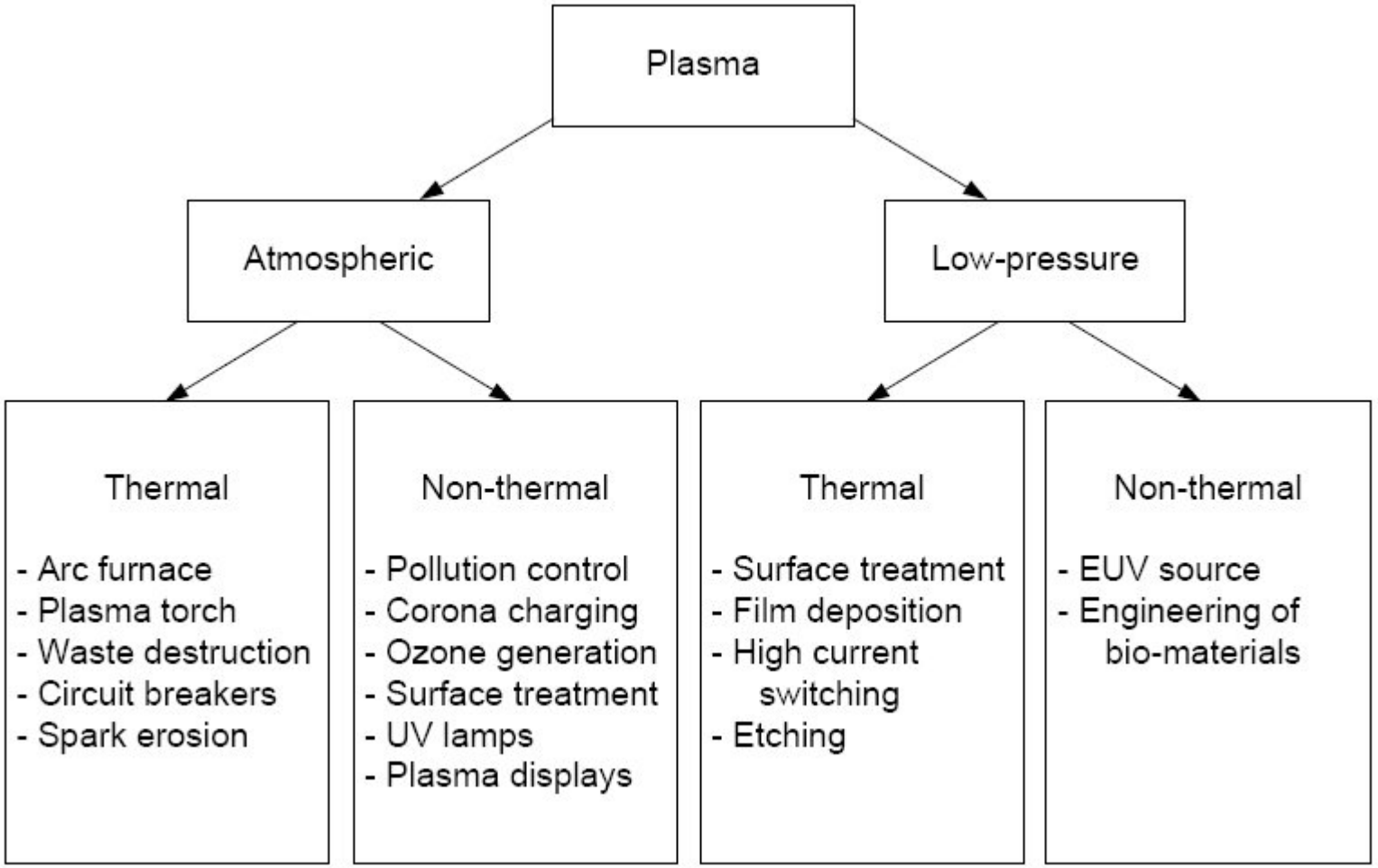

Source: **G.J.J Winands**: Efficient streamer plasma generation, PhD thesis, T.U of Eindhoven, 2007

Plasma sources – low pressure and one atmosphere pressure systems

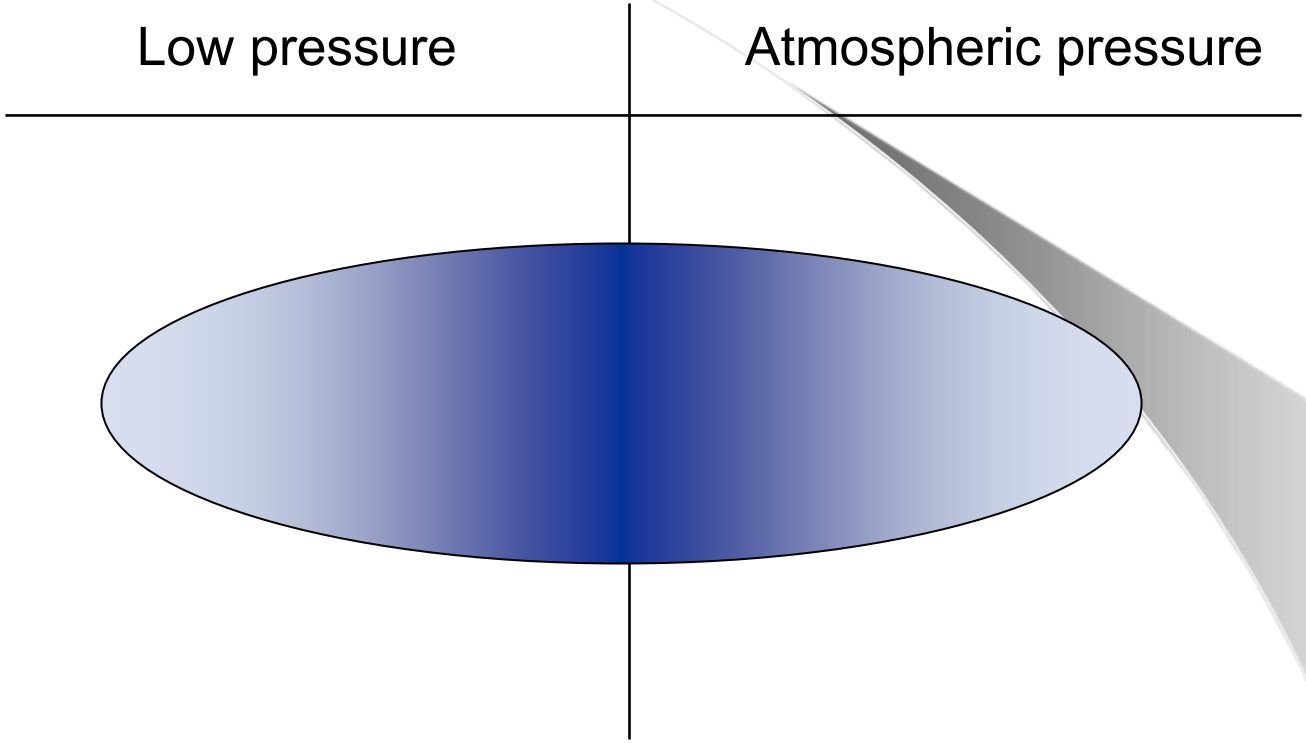

Plasma sources – low pressure and one atmosphere pressure systems

Plasma	State	Example
High temperature plasma (Equilibrium plasma)	$T_e \approx T_i \approx T_g, T_p = 10^6 - 10^8 K$ $n_e \geq 10^{20} m^{-3}$	Laser fusion plasma
Low temperature plasma		
Thermal plasma (Quasi-equilibrium plasma)	$T_e \approx T_i \approx T_g \leq 2 \times 10^4 K$ $n_e \geq 10^{20} m^{-3}$	Arc plasma, plasma torches, RF inductively coupled discharges
Non thermal plasma (Non-equilibrium plasma)	$T_e >> T_i \approx T_g = 300 \ldots\ldots 10^3 K$ $n_e \approx 10^{10} m^{-3}$	Glow, corona, APPJ, DBD, MHCD, OAUGDP, plasma needle etc

Source: Vijay Nehra, Ashok Kumar and H K Dwivedi: „ Atmospheric Non-Thermal Plasma Sources" International Journal of Engineering, Volume (2) : Issue (1)

Application fields:

Surface modification:

- **Etching**

  structuring (microelectronics, micro mechanics), cleaning (assembly)

- **Functionalization**

  hydrophilization, hydrophobization, graftability, adhesability, printability

- **Interstitial modification**

  diffusion (bonding), implantation (hardening)

- **Deposition**

  corrosion protection, integrated circuits, optical, crystallographics, morphology

Source: H Conrads M Schmidt „Plasma generation and plasma sources”, Plasma sources sci. And techn. 9 (2000), pp. 441-454

Application fields:

Volume-related transformation:

- **Energy conversion**

  tailoring of the population of bounded electrons in phase space, luminescent lamps, high-pressure metal vapor lamps, gas lasers, excimer radiation sources, nuclear energy – fusion

- **Plasma chemistry**

  chemical transformations, production of precursors, excimers, clean-up of gases, odors, flue gases, exhausts

Source: H Conrads M Schmidt „Plasma generation and plasma sources”, Plasma sources sci. And techn. 9 (2000), pp. 441-454

Application fields:

Carrier functions:

- **Electrical current**

  circuit breakers, spark gap switches

- **Heat**

  welding/cutting, plasma spray, thermoelectric drivers

Particle sources:

electrons, ions, neutrals

Source: H Conrads M Schmidt „Plasma generation and plasma sources”, Plasma sources sci. And techn. 9 (2000), pp. 441-454

Plasma sources – low pressure and one atmosphere pressure systems

From now on we will concentrate on plasma sources based on electric field excitation.
1. DC discharges

Based on electric field excitation: DC discharges

Generally created in closed discharge vessels using interior electrodes. Different types of discharges and plasmas can be obtained depending on the applied voltage and discharge current.

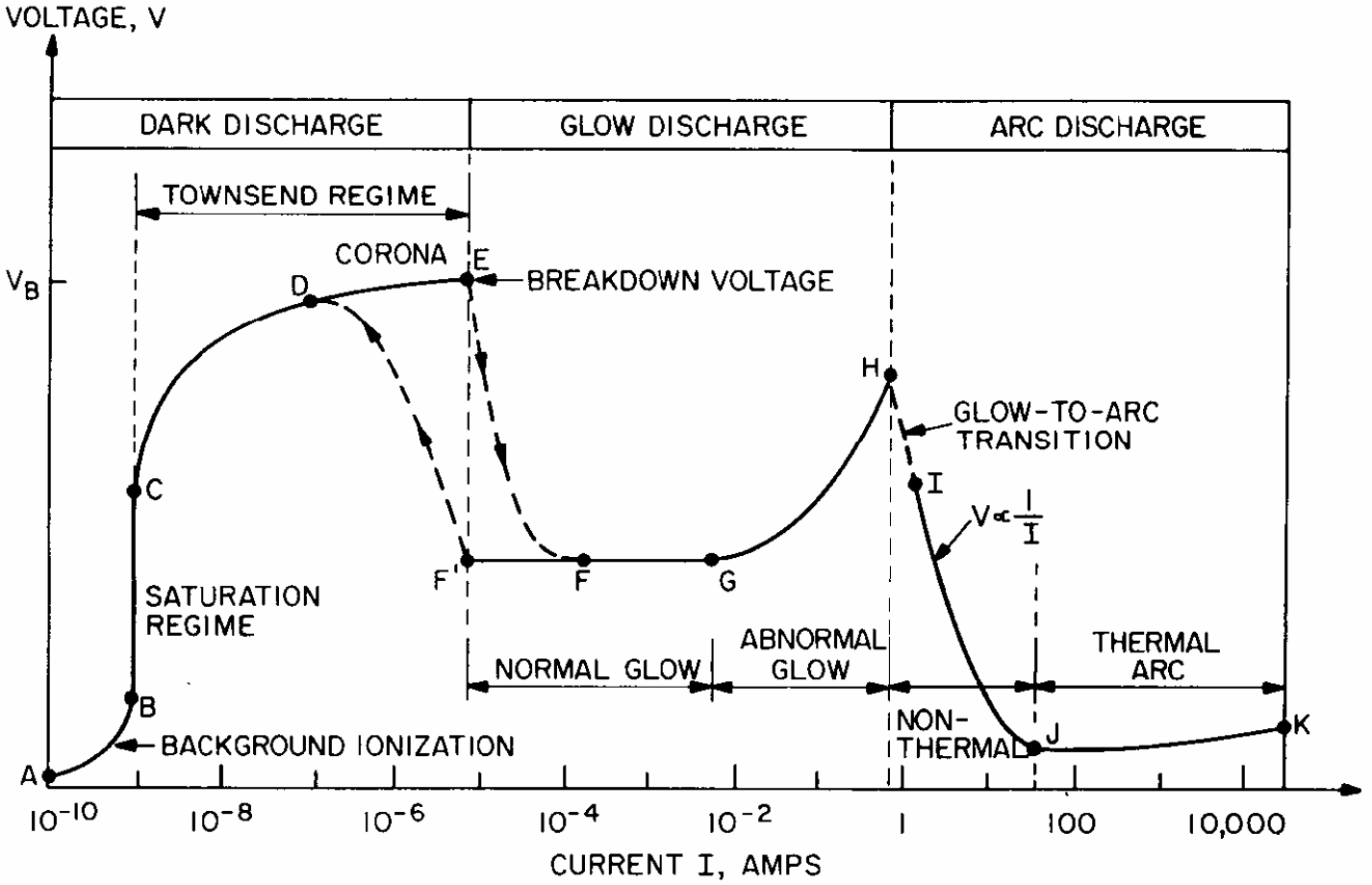

Source: H Conrads M Schmidt „Plasma generation and plasma sources", Plasma sources sci. And techn. 9 (2000), pp. 441-454

Source: J. Reece Roth: Mechanisms of Sterilization, Decontamination, and Surface Energy Enhancement by Exposure to the One Atmosphere Uniform Glow Discharge Plasma (OAUGDP)

Plasma sources – low pressure and one atmosphere pressure systems

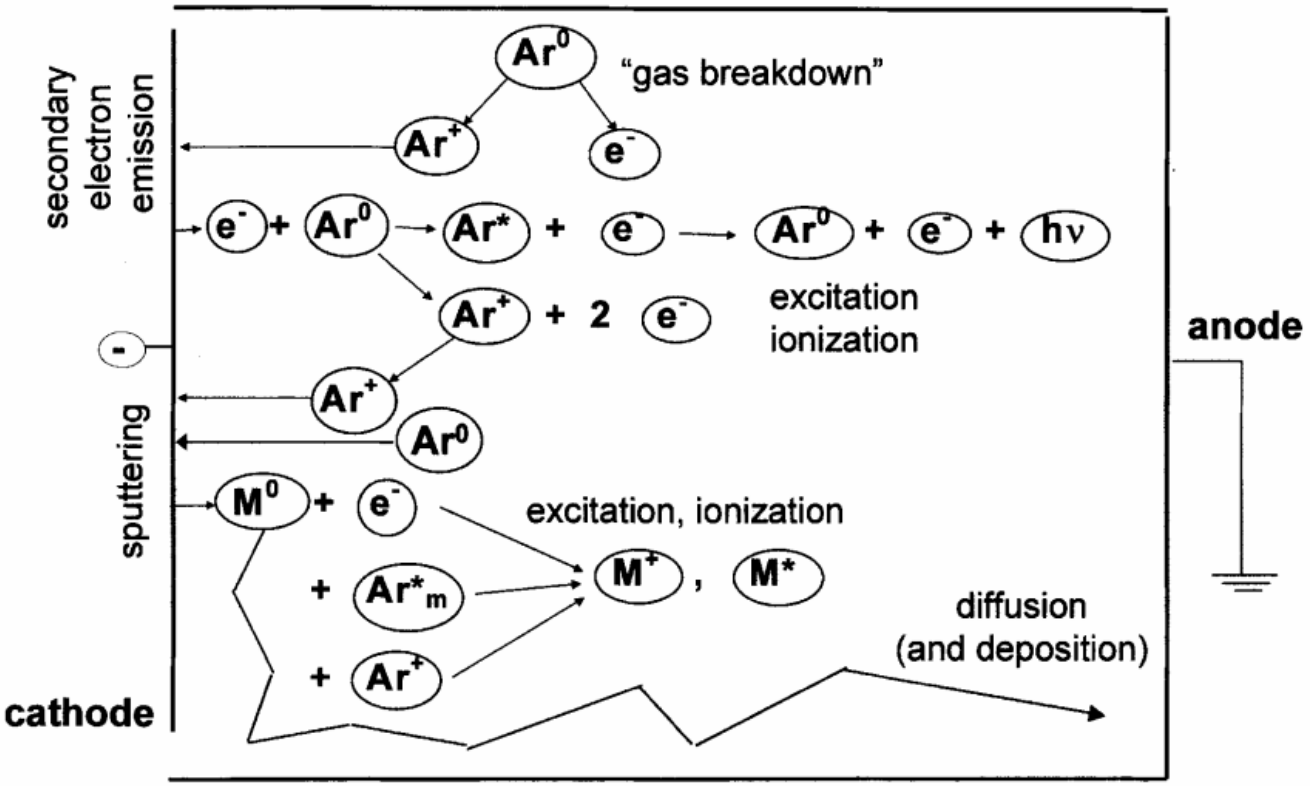

Source: Annemie Bogaerts, Erik Neyts, Renaat Gijbels, Joost van der Mullen: „Gas discharge plasmas and their applications", Spectrochimica Acta Part B 57 (2002) 609–658

Based on electric field excitation: DC discharges

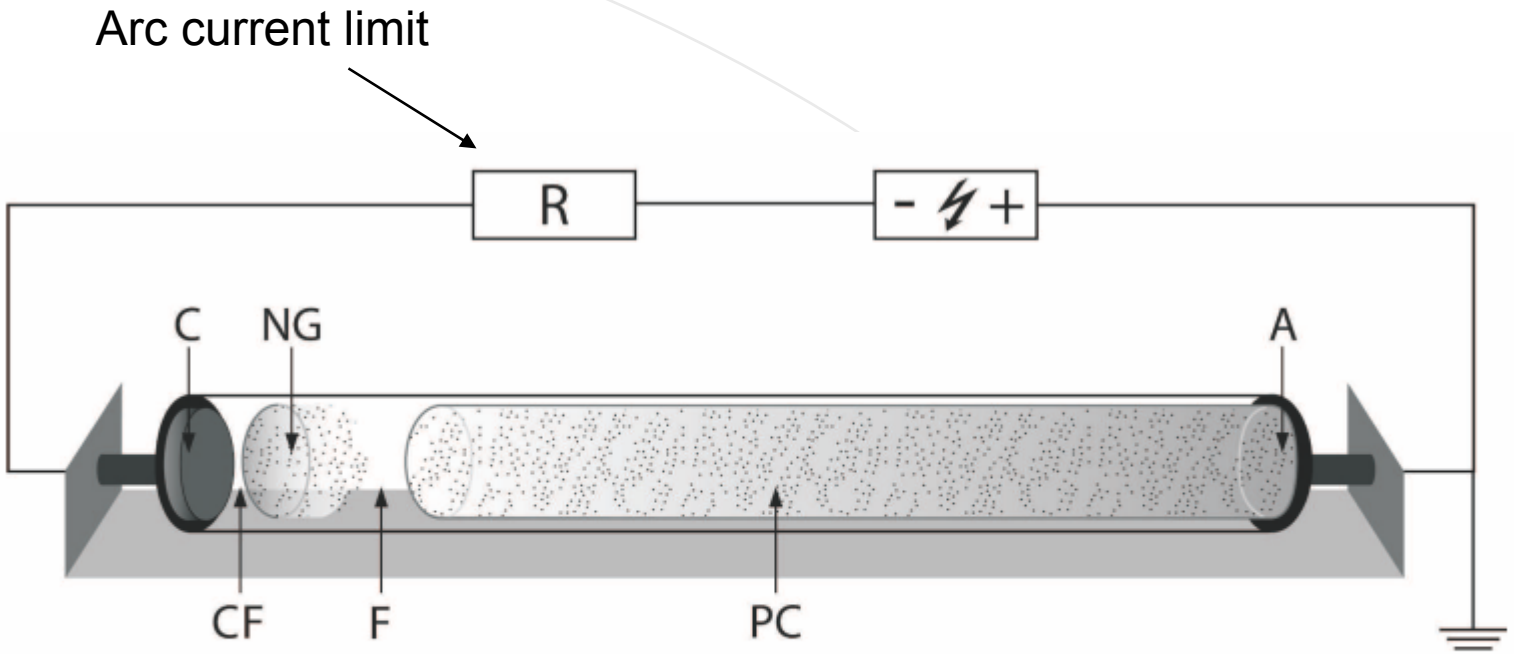

Figure II.7: Low pressure DC glow discharge. C: cathode, A: anode, CF: cathode fall, NG: negative glow, F: Faraday dark space, PC: positive column, R: resistance.

Source: M Schmidt „Plasma sources", Ch. II Fundamentals, sources and diagnostics, Non-thermal Plasma Chemistry and Physics,

Plasma sources – low pressure and one atmosphere pressure systems

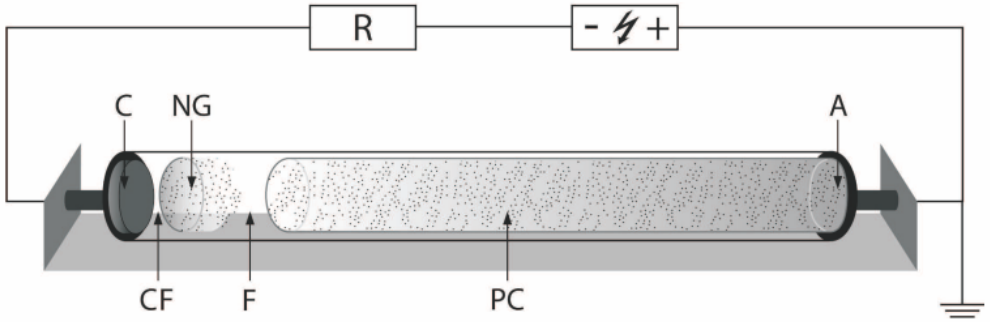

Figure II.7: Low pressure DC glow discharge. C: cathode, A: anode, CF: cathode fall, NG: negative glow, F: Faraday dark space, PC: positive column, R: resistance.

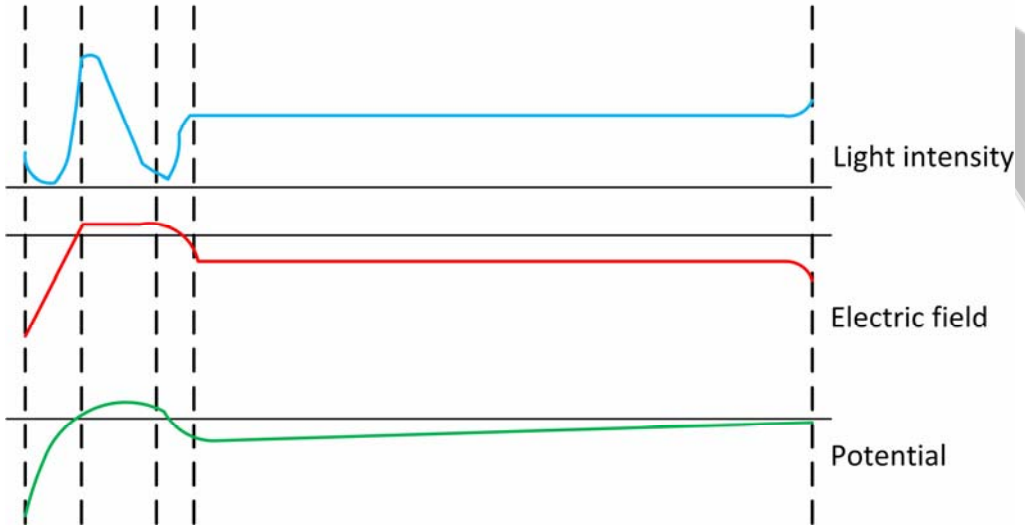

Source: M Schmidt „Plasma sources", Ch. II Fundamentals, sources and diagnostics, Non-thermal Plasma Chemistry and Physics, in edition

Source: Annemie Bogaerts, Erik Neyts, Renaat Gijbels, Joost van der Mullen: „Gas discharge plasmas and their applications", Spectrochimica Acta Part B 57 (2002) 609–658

Plasma sources – low pressure and one atmosphere pressure systems

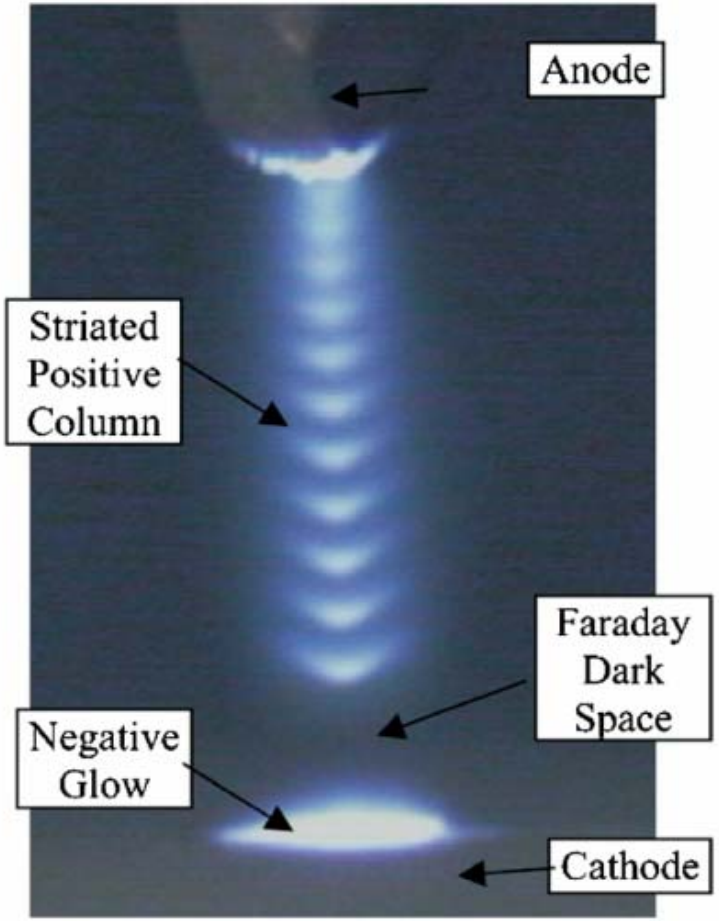

Figure 17. Image of the glow discharge in atmospheric pressure hydrogen. Positive column and negative glow are visible; standing striations are visible in the positive column [89].

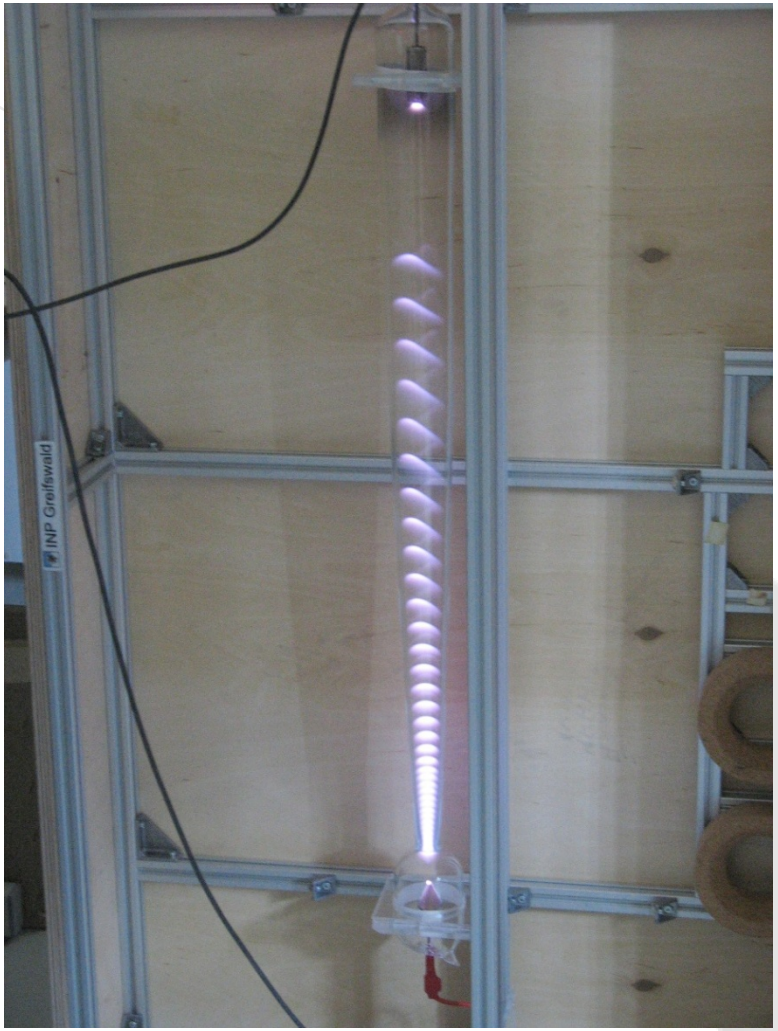

Source: S M Starikovskaia: „Plasma assisted ignition and combustion", J. Phys. D: Appl. Phys. 39 (2006) R265–R299

Plasma sources – low pressure and one atmosphere pressure systems

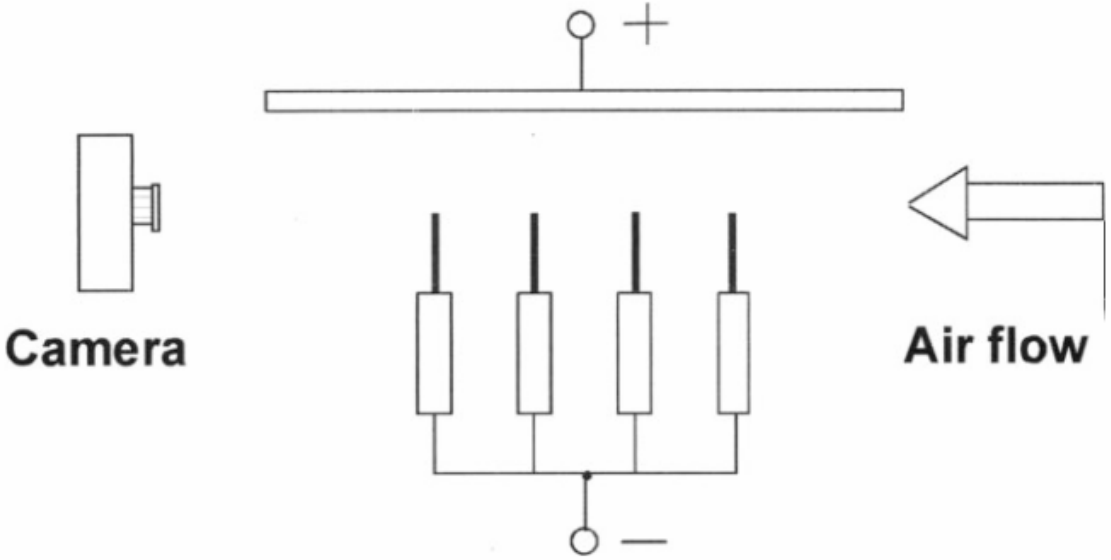

Fig. 2. Sketch of a multi-pin electrode system used for generating a volume diffusive glow discharge in air flow at atmospheric pressure.

„A general scheme of our lab-scale plasma reactor based on DC volume diffusive glow discharge is depicted in Fig. 2. The novel plasma source operates at atmospheric pressure and generates a non-thermal plasma jet of rectangular shape. This source produces many chemically active species without significantly heating the background gas flow. A steady-state diffusive glow discharge is sustained by rectified high voltage (up to 30 kV), which is applied to the multi-pin cathode and plane anode, separated by a gap h about of 1 cm (Fig. 2). The distance between sharpened pins equals 3.5 mm. Different materials and diameters of the pins were tested. One of the variants corresponds to sharpened pins fabricated from stainless steel with a diameter of 1 mm. Each cathode pin is ballasted with a resistor of 1 MR".

Source: Akishev, Grushin, Napartovich, and Trushkin: „Novel AC and DC Non-Thermal Plasma Sources for Cold Surface Treatment of Polymer Films and Fabrics at Atmospheric Pressure", Plasmas and Polymers, Vol. 7, No. 3, September 2002

Plasma sources – low pressure and one atmosphere pressure systems

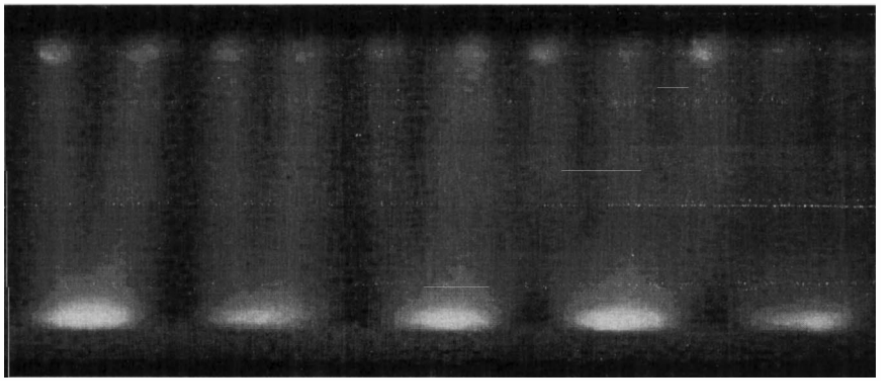

Fig. 5. Photograph of a section of multi-pin DC steady-state diffusive glow discharge in air flow at atmospheric pressure (upwind direction like in Fig. 2, multi-pin cathode is located on top of the picture). Experimental conditions are the same as in Fig. 6. Discharge current reduced to 1 cm in transverse direction is 1.5 mA/cm.

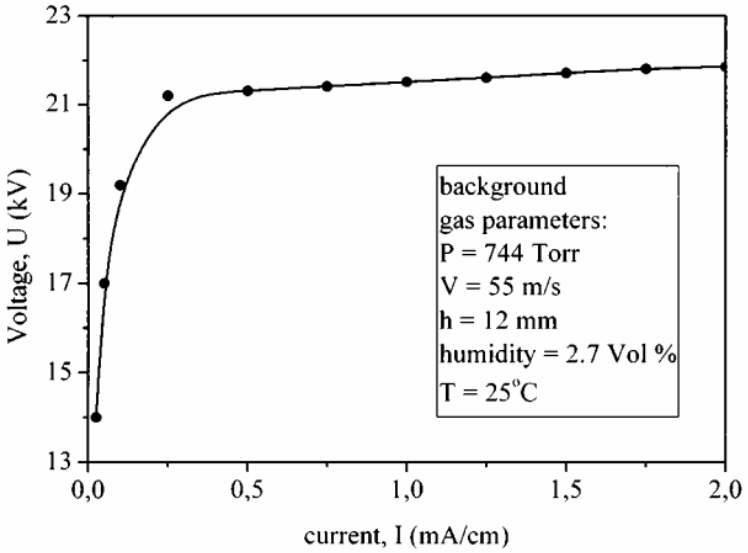

Fig. 6. Volt-Ampere Characteristic for reduced current per 1 cm in transverse direction of a multi-pin steady-state diffusive discharge in fast air flow.

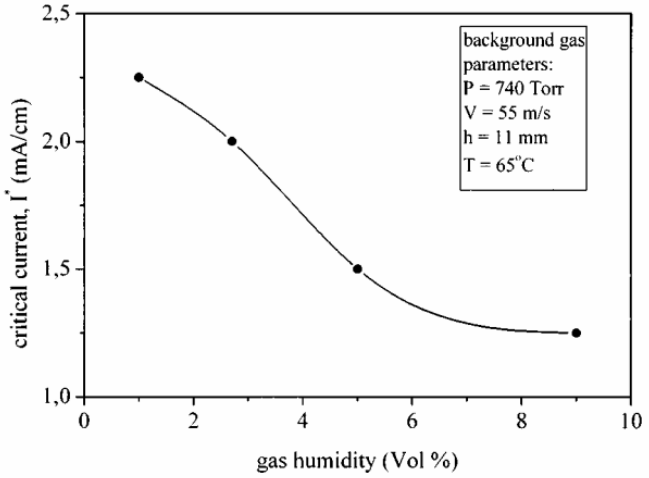

Fig. 8. Air flow humidity influence on the reduced critical current I* characterizing the glow-to-spark transition.

Source: Akishev, Grushin, Napartovich, and Trushkin: „Novel AC and DC Non-Thermal Plasma Sources for Cold Surface Treatment of Polymer Films and Fabrics at Atmospheric Pressure", Plasmas and Polymers, Vol. 7, No. 3, September 2002

Plasma sources – low pressure and one atmosphere pressure systems

The magnetron discharge mainly applied in sputter devices is characterized by the application of an external magnetic field approximately parallel to the cathode surface. For sufficient low pressures (10− 1 Pa) the electrons are trapped by gyration movement. This prolonged mean free path length enables a satisfactory ionization rate at very low gas pressures. The ions are not trapped and collide with sufficient energy for sputtering at the cathode surface.

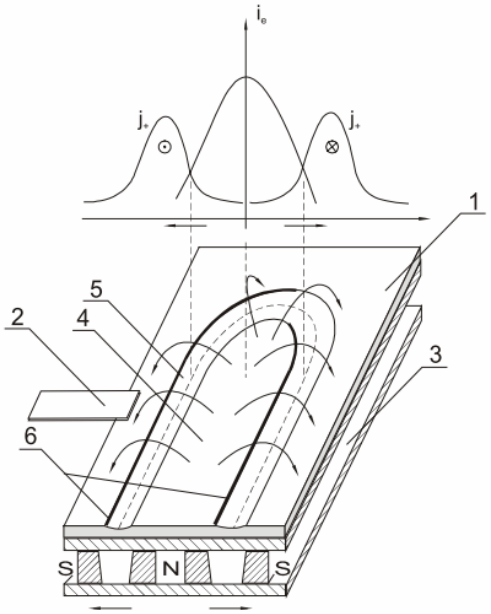

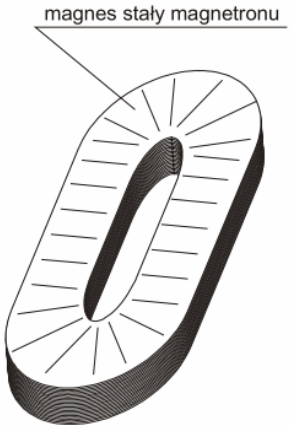

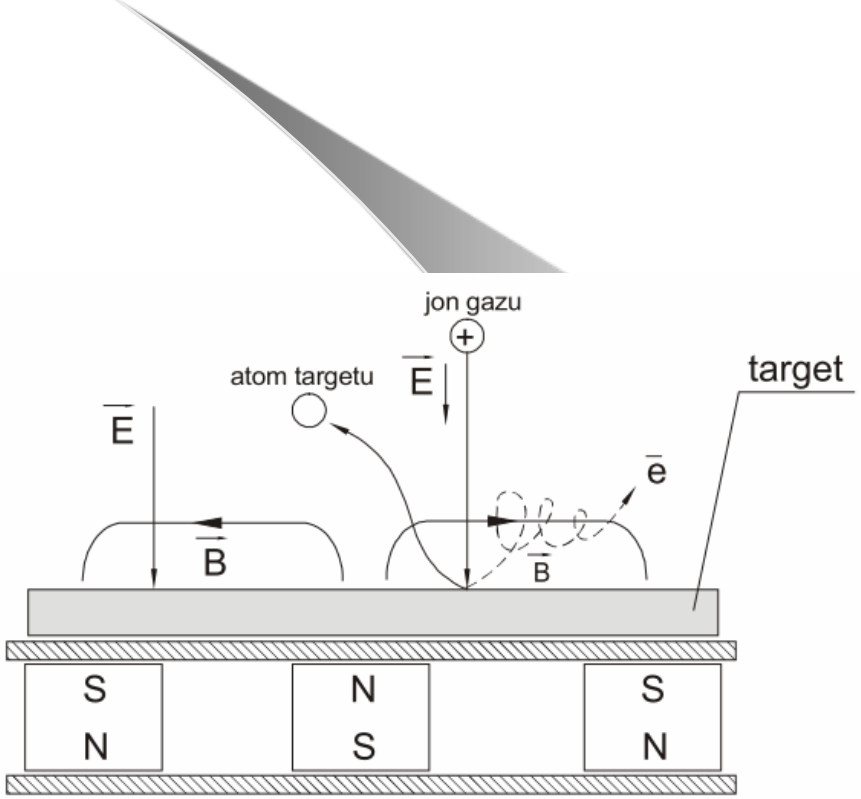

Source: M Schmidt „Plasma sources", Ch. II Fundamentals, sources and diagnostics, Non-thermal Plasma Chemistry and Physics, in edition

Dr Kazimierz Reszka: Materiały pomocnicze do ćwiczeń laboratoryjnych z tematyki wyładowań elektrycznych w gazach rozrzedzonych, POLITECHNIKA KOSZALIŃSKA, KATEDRA INŻYNIERII MATERIAŁOWEJ, skrypt

2. RF and microwave discharges

What if the elctrodes are non – conducting or if a dielectric layer appears?

- well, no longer DC due to single charging of the parasitic capacitor structure !
- We can neutralize this effect if we can periodically change the role of both electrodes !
- This means AC ! – but your half period needs to be lower then the recharge time of the capacitor ! And this results in increased frequency !

Plasma sources – low pressure and one atmosphere pressure systems

„Radio frequency discharges usually operate in the frequency range f = 1–100 MHz. The wavelengths (λ = 3–300 m) are large in comparison to the reactor dimensions. At lower frequencies the ions collide with the electrode surface and generate secondary electrons. For higher frequencies neither the ions nor the electrons can reach the electrode surface during the acceleration phase of the external electric field, the charge carriers are produced by electron impact ionisation of heavy particles in the volume. The power supply must be connected with the reactor by an impedance matching network. In this way the power transfer is maximized and the reflected rf power is minimized. Two principle different ways are used for coupling of the high frequency electromagnetic energy into the reactor: Capacitive and inductive."

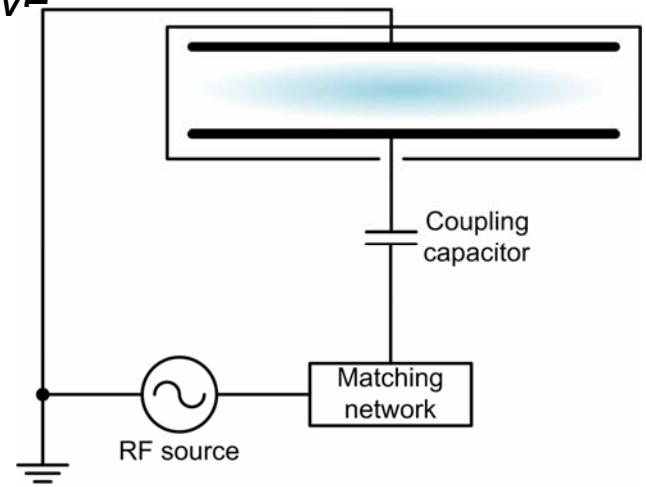

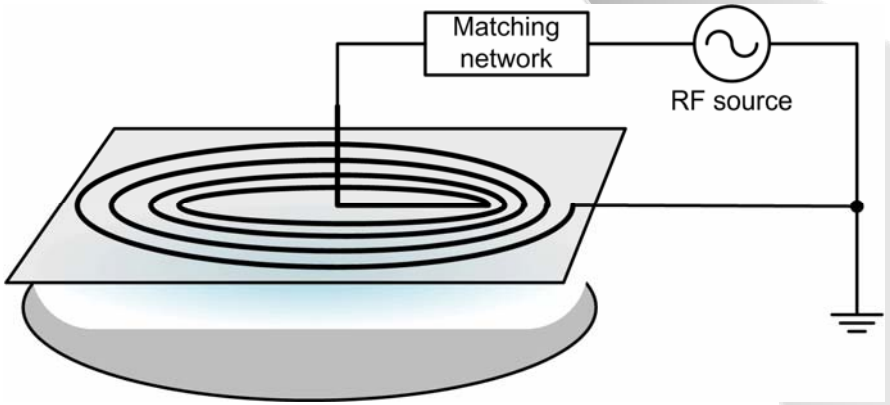

Source: M Schmidt „Plasma sources", Ch. II Fundamentals, sources and diagnostics, Non-thermal Plasma Chemistry and Physics, in edition

Electron plasma frequency:

$$\omega_{pe} = \sqrt{\frac{n_e e^2}{m_e \varepsilon_0}} \longrightarrow f_{pe} = 9000\sqrt{n_e}\,(Hz)$$

For typical electron densities of 10^{10} - 10^{13} cm^{-3} it resul

$9x10^8$ to $3x10^{10}$ Hz

Source: Annemie Bogaerts, Erik Neyts, Renaat Gijbels, Joost van der Mullen: „Gas discharge plasmas and their applications", Spectrochimica Acta Part B 57 (2002) 609–658

How does it come to sputtering ? Self –bias !

But:

-electrodes have to differ in size (some more adequate analysis can be found in:Understanding plasma sources, A. Ganguli and R. D. Tarey, CURRENT SCIENCE, VOL. 83, NO. 3, 10 AUGUST 2002)

-Coupling supply

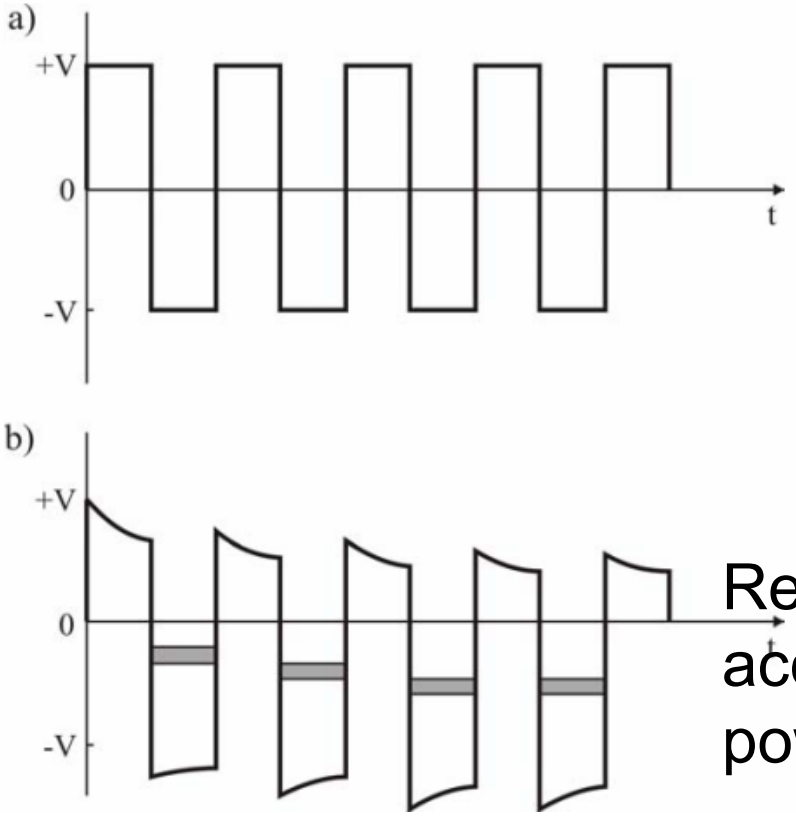

Voltage over discharge

Result – ion accelaration towards powered electrode

Source: Annemie Bogaerts, Erik Neyts, Renaat Gijbels, Joost van der Mullen: „Gas discharge plasmas and their applications", Spectrochimica Acta Part B 57 (2002) 609–658

Plasma sources – low pressure and one atmosphere pressure systems

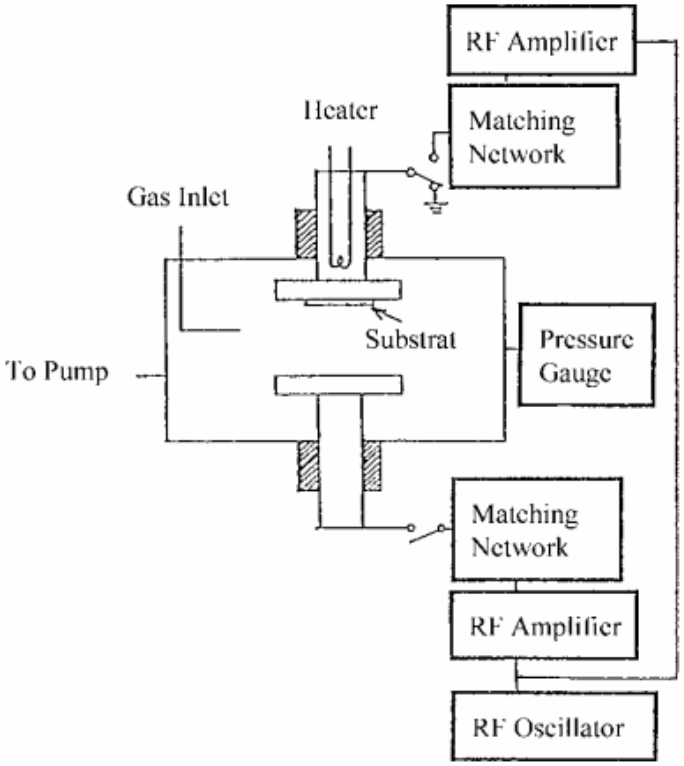

Figure 6. Schematic drawing of a deposition apparatus with a capacitively coupled rf discharge. The rf power is transmitted to the electrodes by a matching network. The substrat can be on the powered or grounded electrode, after [11].

Typical parameters:
- f = 1 – 100 MHz
- often f = 13.56 MHz
- distance between electrodes: a few cm
- pressure: 1-10^3 Pa
- electron density 10^9 – 10^{10} cm^{-3}

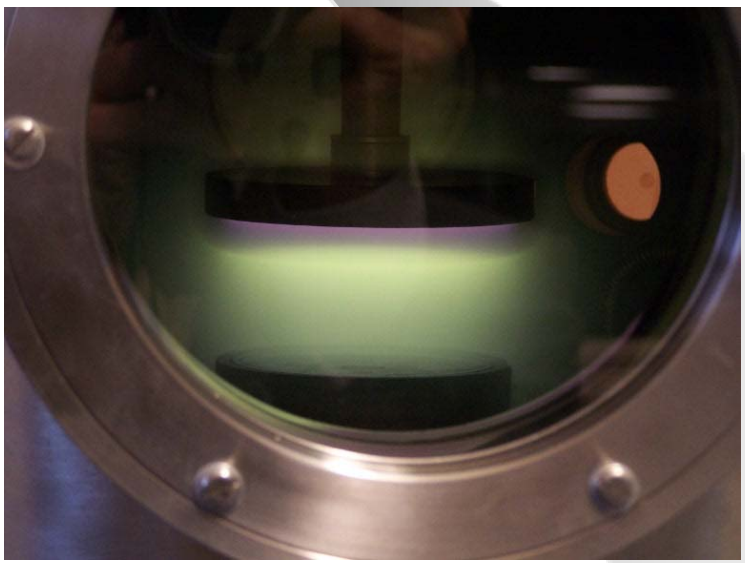

Source: H Conrads M Schmidt „Plasma generation and plasma sources", Plasma sources sci. And techn. 9 (2000), pp. 441-454

Plasma sources – low pressure and one atmosphere pressure systems

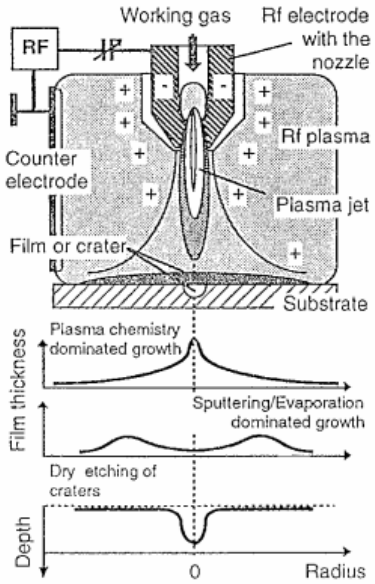

Figure 7. Schematic representation of the rf plasma jet system for plasma processing. The actual process depends on the working gas mixture and system parameters. The powered rf electrode with the nozzle is negatively charged because of the self-bias. In the lower part of the figure are presented examples of deposition and etch profiles. Plasma chemistry dominated deposition and etching is maximum in the centre because of the highest concentration of radicals in this part of the plasma. The source of the sputtered/evaporated material is the nozzle [15].

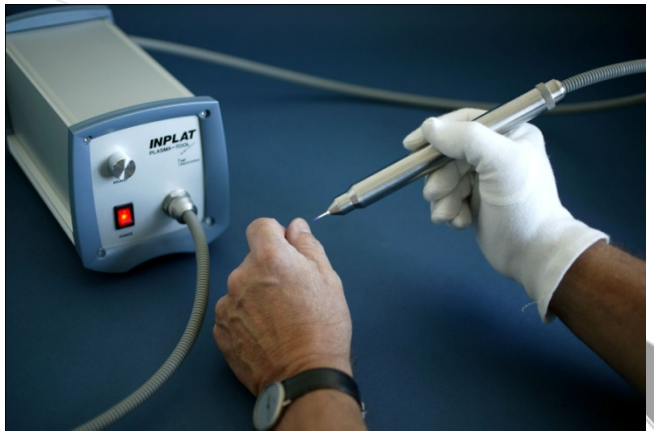

Source: H Conrads M Schmidt „Plasma generation and plasma sources”, Plasma sources sci. And techn. 9 (2000), pp. 441-454

Two types of RF discharges exist:

- α mode – (ionisation in the bulk plasma) lower currents, positive V – I characteristics – Townsend's first ionisation coefficient

- γ mode – (secondary electron emission and ionisation in the rf-sheeth is the primary sustaining mechanism) higher currents, partially negative V-I characteristics; more intense emission, - ion-induced secondary electron emission from the target

Source: H Conrads M Schmidt „Plasma generation and plasma sources", Plasma sources sci. And techn. 9 (2000), pp. 441-454

Capacitively coupled discharges are also possible in atmospheric

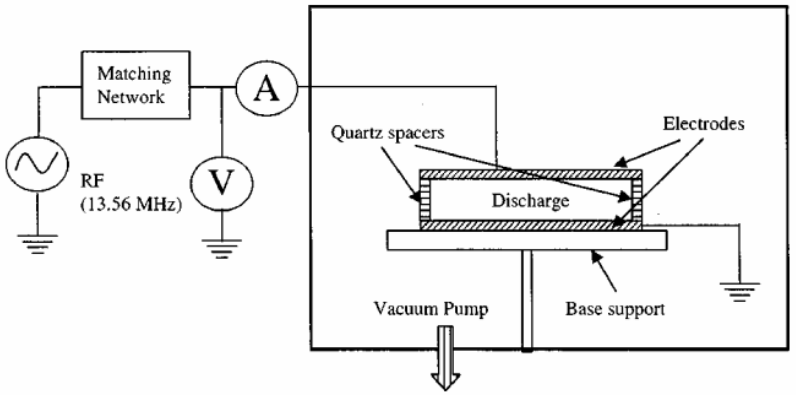

FIG. 1. Schematic of the experimental setup. The discharge system is placed in a vacuum chamber to reduce impurities in the discharge and to operate at the desired pressure, up to atmospheric pressure.

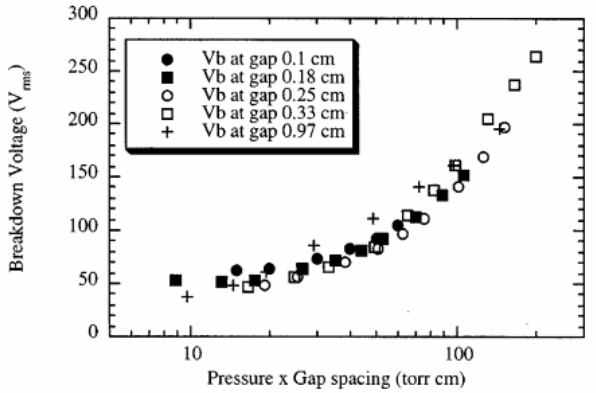

FIG. 2. Breakdown voltage measurements as a function of gas pressure and gap spacing in pure helium using aluminum electrodes. Five different gap spacings are used, 0.1, 0.18, 0.25, 0.33, and 0.97 cm.

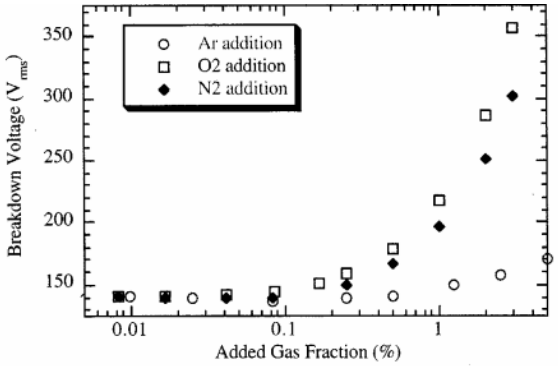

FIG. 4. Breakdown voltage measurements as a function of gas composition with addition of argon, nitrogen, and oxygen to pure helium. Other discharge parameters are: gap spacing=0.16 cm, gas pressure=600 Torr, and rf frequency=13.56 MHz.

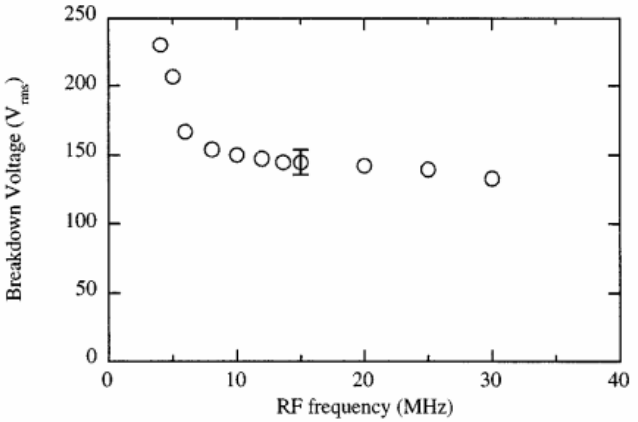

FIG. 3. Breakdown voltage measurements as a function of rf frequency in pure helium for a gap spacing of 0.16 cm and a gas pressure of 600 Torr.

Source: Jaeyoung Park, I. Henins, H. W. Herrmann, and G. S. Selwyn: „Gas breakdown in an atmospheric pressure radio-frequency capacitive plasma source", JOURNAL OF APPLIED PHYSICS VOLUME 89, NUMBER 1 1 JANUARY 2001

From Maxwell – Faraday equation:

$$\nabla \times E = -\frac{\partial B}{\partial t}$$

So also inductively coupled plasmas (ICP) can be produced, usually in cylindrical or helical coil construction.

Plasma sources – low pressure and one atmosphere pressure systems

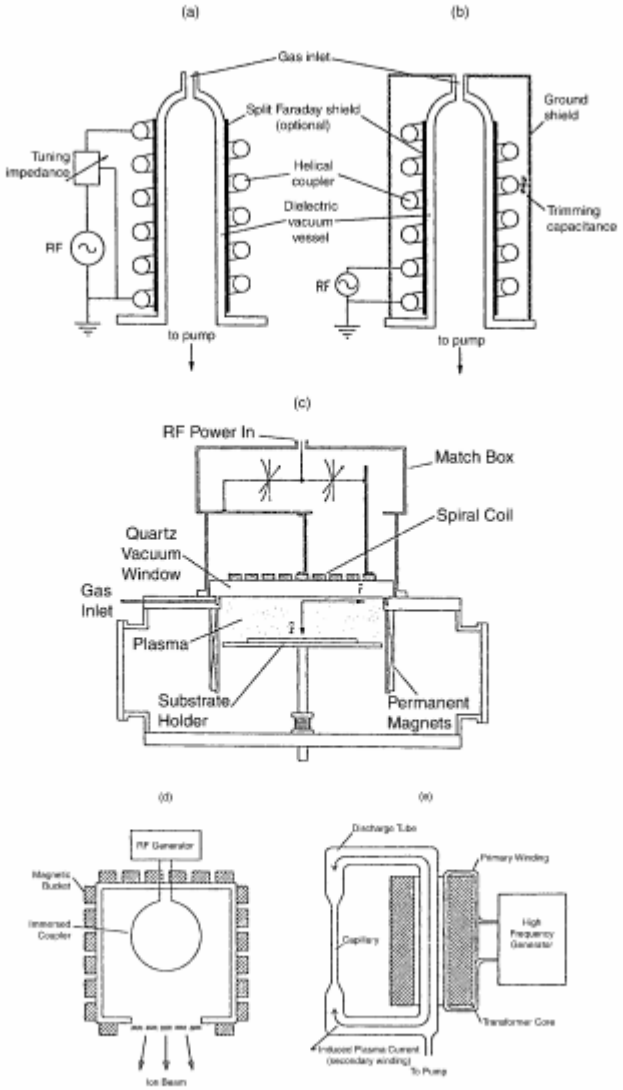

Figure 8. Diagrams of various ICP reactors: helical coupler (a), helical resonator (b), spiral coupler (c), immersed coupler (d), and transformer-coupled plasma (e). The Faraday shield in devices (a) and (b) avoids capacitively coupling from the coil to the plasma. The permanent magnets (c) and (d) confine the plasma, enhance the uniformity, and increase the plasma density [16].

Typical parameters:

- f = 1 – 50 MHz
- often f = 13.56 MHz
- pressure: 1-10^3 Pa
- electron density 10^{12} – 10^{13} cm^{-3}

Pressure Unit Conversion Constants ALL SENSORS®

(Most commonly used - per international conventions; * = exact conversion factor)

▶ MULTIPLY ▶ / TO OBTAIN ▶	Pounds Per Square Inch	in. H_2O (at 39.2°F)	in. Hg (at 32°F)	Kilopascal (Pa = N/m²)	Millibar	cm H_2O (at 4°C)	mm Hg (at 0°C) (Torr)	kgf/cm²	Atmosphere (standard)
Pounds Per Square Inch	1.000	27.681	2.036	6.8948	68.948	70.309	51.715	7.0307×10^{-2}	6.805×10^{-2}
in. H_2O (at 39.2°F)	3.6126×10^{-2}	1.000	7.3554×10^{-2}	0.2491	2.491	2.5400*	1.8683	2.54×10^{-3}*	2.458×10^{-3}
in. Hg (at 32°F)	0.4912	13.595	1.000	3.3864	33.864	34.532	25.400*	3.4531×10^{-2}	3.342×10^{-2}
Kilopascal (Pa = N/m²)	0.14504	4.0147	0.2953	1.000	10.000*	10.1973	7.5006	1.0197×10^{-2}	9.8692×10^{-3}
Millibar	0.01450	0.40147	0.02953	0.100*	1.000	1.01973	0.75006	1.0197×10^{-3}	9.8692×10^{-4}
cm H_2O (at 4°C)	1.4223×10^{-2}	0.3937	2.8958×10^{-2}	0.09806	0.9806	1.000	0.7355	1.0×10^{-3}	9.678×10^{-4}
mm Hg (at 0°C) (Torr)	1.9337×10^{-2}	0.53525	3.9370×10^{-2}	0.13332	1.3332	1.3595	1.000	1.3595×10^{-3}	1.3158×10^{-3}
kgf/cm²	14.223	393.71	28.959	98.0665	9.8067×10^{2}	1.000×10^{3}	7.3556×10^{2}	1.000	0.9678
Atmosphere (standard)	14.696	406.79	29.921	1.0133×10^{2}	1.0133×10^{3}	1.033×10^{2}	7.600×10^{2}	1.0332	1.000

408.225.4314 info@allsensors.com www.allsensors.com

Source: H Conrads M Schmidt „Plasma generation and plasma sources", Plasma sources sci. And techn. 9 (2000), pp. 441-454

Injection of microwave power (300MHz to 10 GHz) results in microwave plasma excitation:

-resonant cavities

-Free expending plasma torches

-Capacitive microwave plasmas

-Microstrip plasmas

-Surface wave discharges

Source: Annemie Bogaerts, Erik Neyts, Renaat Gijbels, Joost van der Mullen: „Gas discharge plasmas and their applications", Spectrochimica Acta Part B 57 (2002) 609–658

Plasma sources – low pressure and one atmosphere pressure systems

The plasma generation by microwaves has the advantage of an electrodeless discharge with an effective power absorption in a broad pressure range (1–10^5 Pa), with high electron densities (up to 10^{13} cm^{-3}) and low sheath potentials and therefore low ion energies at the wall or the target surface. Microwave discharges can be generated in closed or open structures or on a plasma resonance. In the low pressure regime the ignition and sustaining of a microwave discharge can be supported by magnetic fields.

Characteristic features of microwaves are the wavelength, which is comparable to the dimensions of the plasma apparatus (2.45 GHz: λ = 12.24 cm), and the short period of the exciting microwave field. The amplitude of the oscillations of the electrons in the microwave field is very small. For an excitation frequency f = 2.45 GHz and an amplitude E0 = 500 V cm^{-1} it is 3.5 × 10^{-3} cm.

A microwave plasma reactor consists in principle of a microwave power supply, a circulator, the applicator, and the plasma load. The transmission lines are rectangular waveguides or, at lower powers, coaxial cables. The applicator should optimize the energy transfer into the plasm ion. The pply from reflec

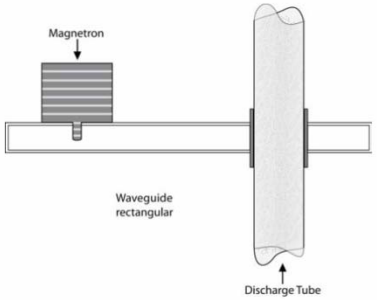

Figure II.21: Coupling of discharge tube with a rectangular wave guide.

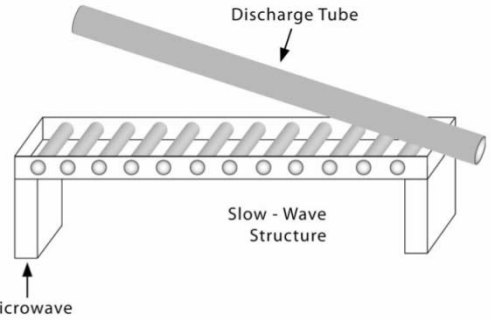

Figure II.22: Microwave plasma generation by a slow wave structure. SWS: slow wave structure, DT: discharge tube [108].

Source: M Schmidt „Plasma sources", Ch. II Fundamentals, sources and diagnostics, Non-thermal Plasma Chemistry and Physics, in edition

Source: H Conrads M Schmidt „Plasma generation and plasma sources", Plasma sources sci. And techn. 9 (2000), pp. 441-454

Plasma sources – low pressure and one atmosphere pressure systems

An interesting solution for the microwave excitation of a large volume plasma in a broad pressure range (10^{-3} –10^{5} Pa) are the slot antenna plasma sources (SLAN). The microwave energy is transferred from a ring cavity through equidistantly positioned slot antennas into the quartz

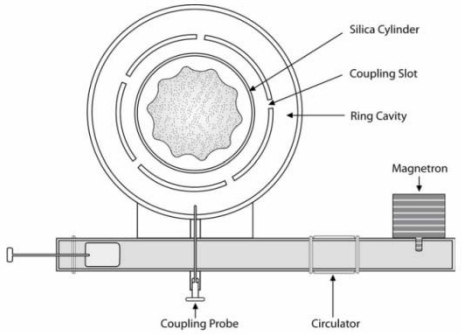

Figure II.25: Scheme of the slot antenna plasma inside the silica cylinder [104].

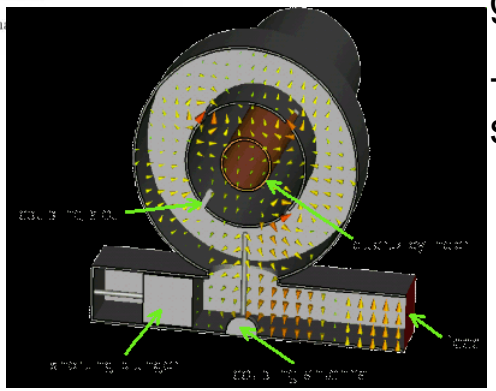

Typical examples for plasma excitation by plasma resonance are Electron Cyclotron Resonance reactors. The microwaves are launched through a window into the vacuum vessel with outer magnet coils which generate an axial symmetric magnetic field. For a magnetic field of 0.0875 T the electron cyclotron frequency becomes 2.45 GHz.

-„ball-lke" plasma

- tratment of complicated geometries

- treatment of inner surfaces

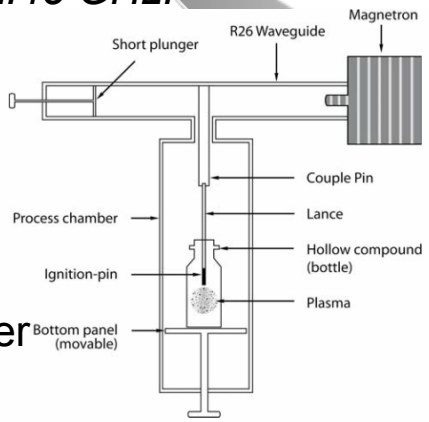

Figure II.26: Scheme of source with moving plasma. M: magnetron, R: R26 waveguide, SP: short plunger, CP: coupling pin, L: lance with ignition-pin (IP), P: plasma, PC: process chamber [118].

Source: M Schmidt „Plasma sources", Ch. II Fundamentals, sources and diagnostics, Non-thermal Plasma Chemistry and Physics, Computer simulation technology: http://www.cst.com/Content/Applications/Article/Microwave+Plasma+Sources

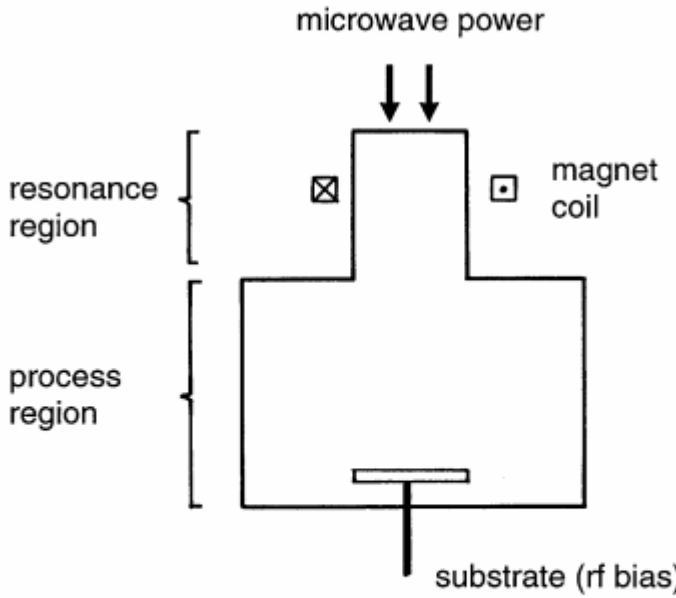

Fig. 8. Schematic representation of an electron cyclotron resonance (ECR) discharge source, illustrating the spatial separation into resonance region (electron kinetics) and application (process) region, typical for a remote plasma.

Electron cyclotron resonance (ECR) plasmas are generated from the interaction between an electric field at microwave frequency and a superimposed magnetic field, in such a way that the electrons are in resonance with the microwave field. The plasma flows along the magnetic field lines from the resonance region into the process region, where energetic ions and free radicals from the plasma can bombard the surface. When a magnetic field B is applied, the charged particles will be characterized by a gyration around the magnetic field lines, with a frequency $\omega = eB/m$. This frequency is called the angular cyclotron frequency, and is independent of the velocity of the particle. Therefore, the cyclotron frequency of the electrons is a characteristic parameter of the system, e.g. at a magnetic field of 875 Gauss, the

electron cyclotron frequency, and hence the microwave frequency needed for resonance is 2.45 GHz.

Source: Annemie Bogaerts, Erik Neyts, Renaat Gijbels, Joost van der Mullen: „Gas discharge plasmas and their applications", Spectrochimica Acta Part B 57 (2002) 609–658

3. Dielectric barrier discharges

Plasma sources – low pressure and one atmosphere pressure systems

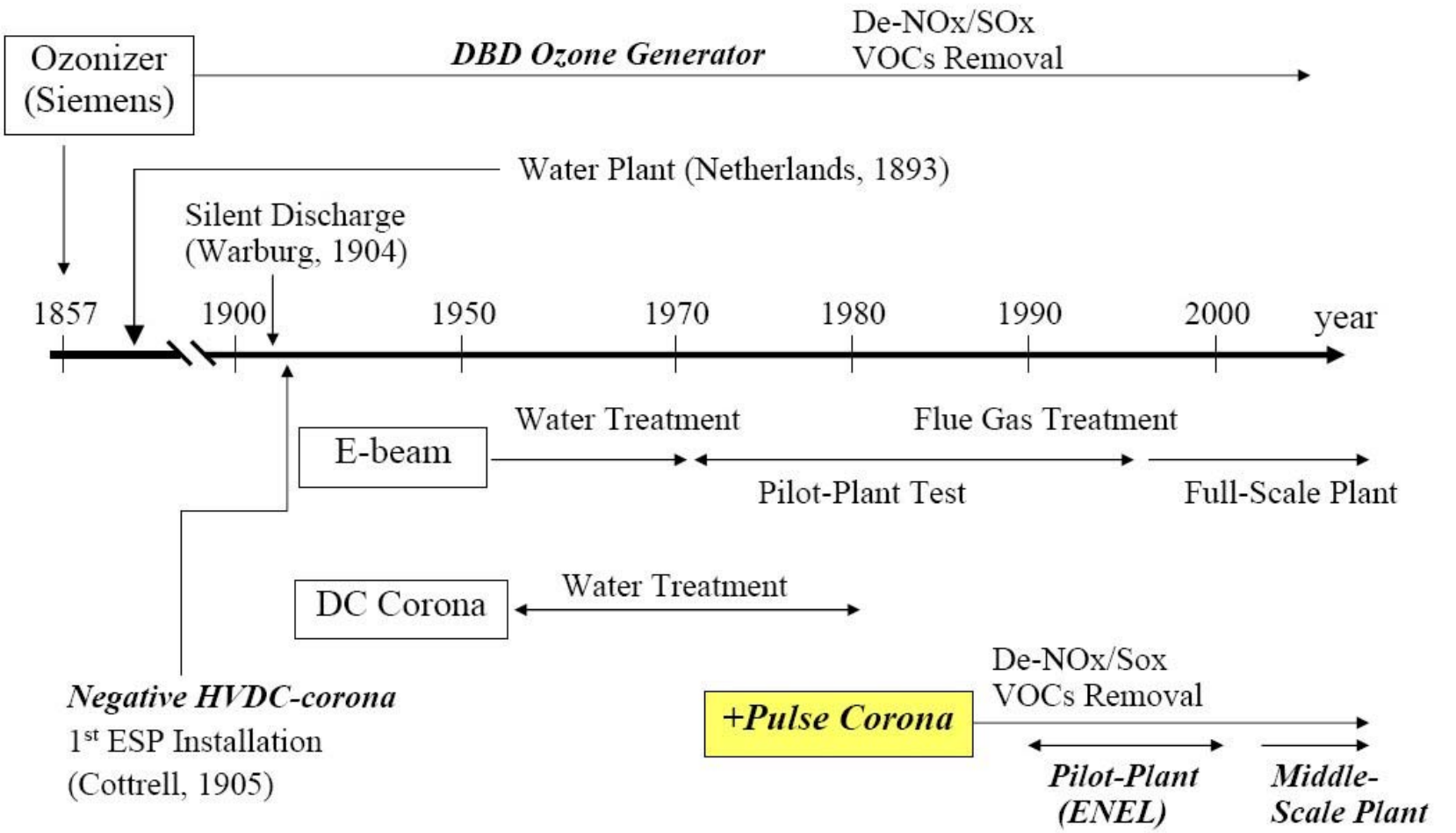

Source: **M.H. Cho, K. B. Ko, Y. C. Byun:** Environmental Applications of Plasmas, *8th APCPST at Cairns, Australia, July 3, 2006*

Plasma sources – low pressure and one atmosphere pressure systems

Sources: *Ozonia* Ltd, Stettbachstrasse 1, Switzerland

Plasma sources – low pressure and one atmosphere pressure systems

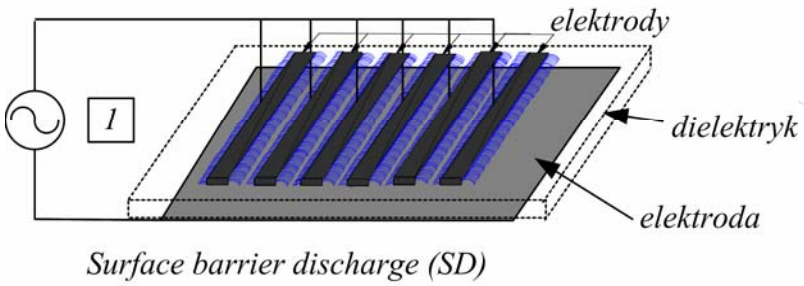

Surface barrier discharge (SD)

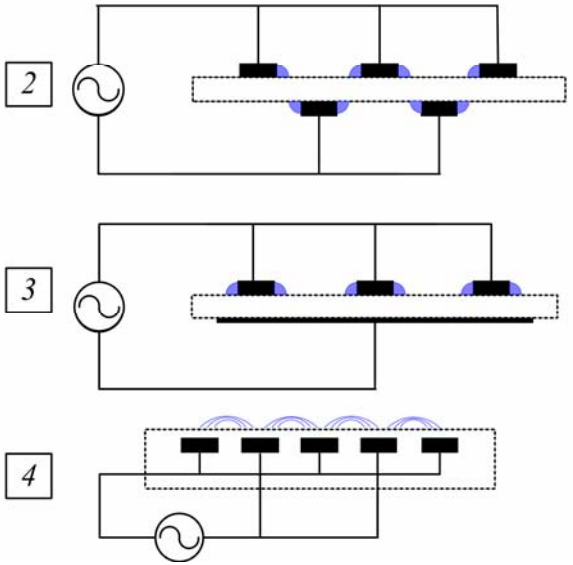

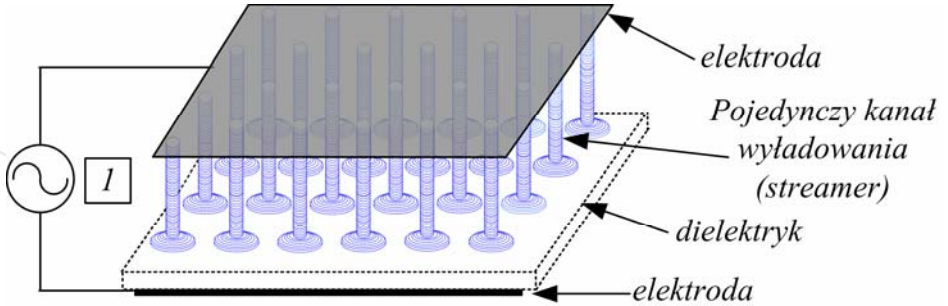

Volume barrier discharge (VD)

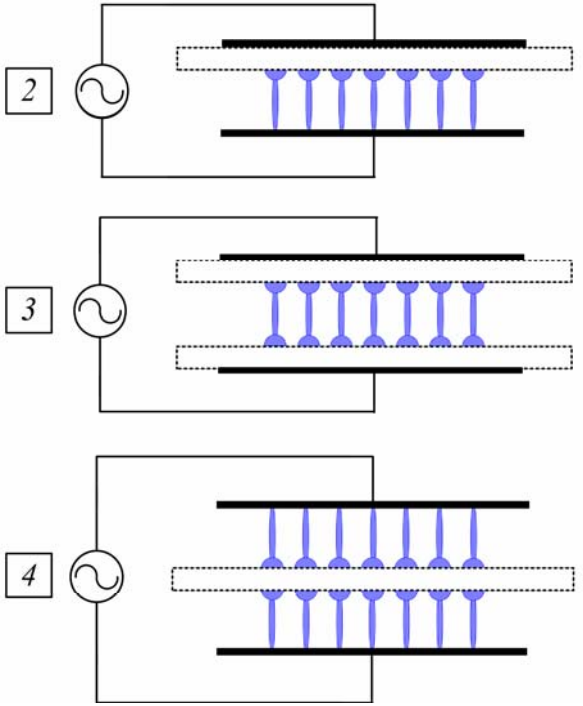

Single streamer channel has a diameter of 10^{-2} – 10^{-1} mm, propagation speed is about 10^{7} – 10^{8} cm/s, current density aroung a kiloamp per square centimeter. Such a discharge channel remains ionised for a few to xx nanocesonds.

Typical operation of DBD reactors in air:

-Voltage: 1 – 20 kV

-Frequency: 50Hz – 30 kHz

-Pressure 1-3 bar

-Gap 0.2 – 10 mm

-Dielectric material: glass, Al_2O_3, ferroelectrics

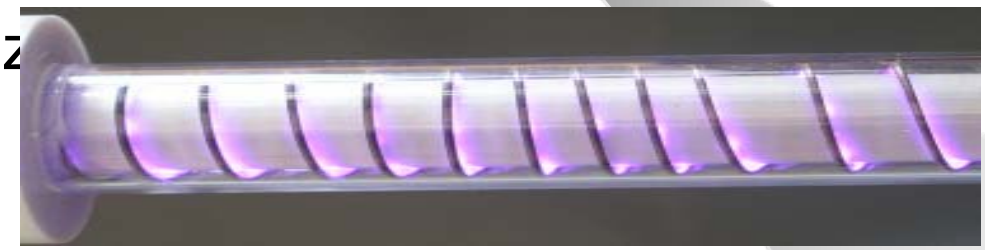

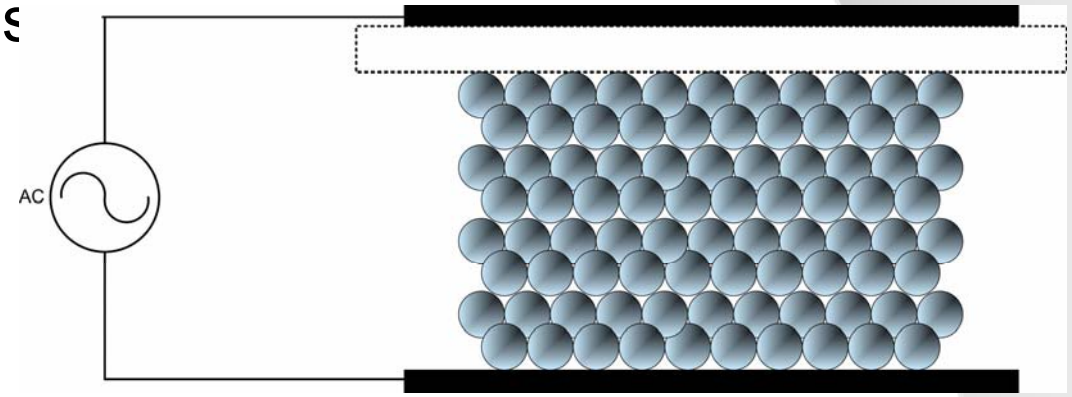

3a. Pulsed systems – no dielectric barrier

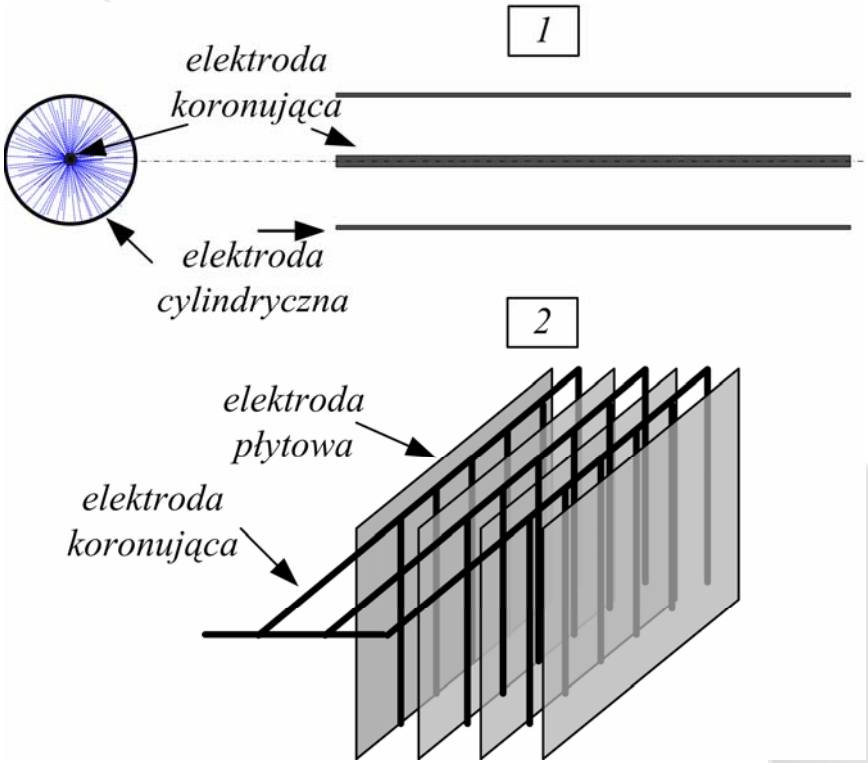

4. Beam generated plasmas

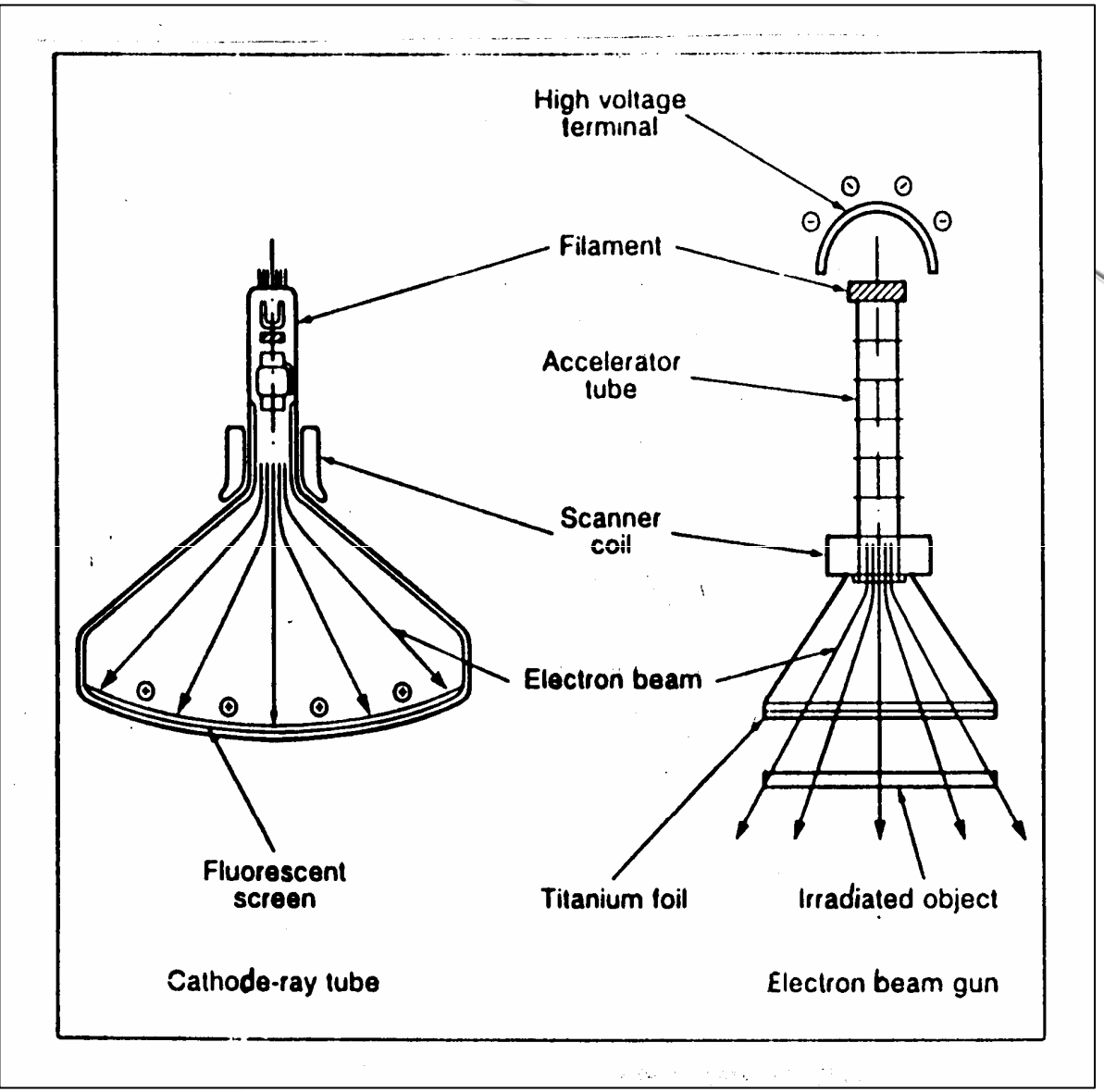

TV vs. accelerator – how it works

Source: „FLUE GAS PURIFICATION", *Andrzej G.Chmielewski, Institute of Nuclear Chemistry and Technology & Warsaw University of Technology Warsaw, Poland*

Plasma sources – low pressure and one atmosphere pressure systems

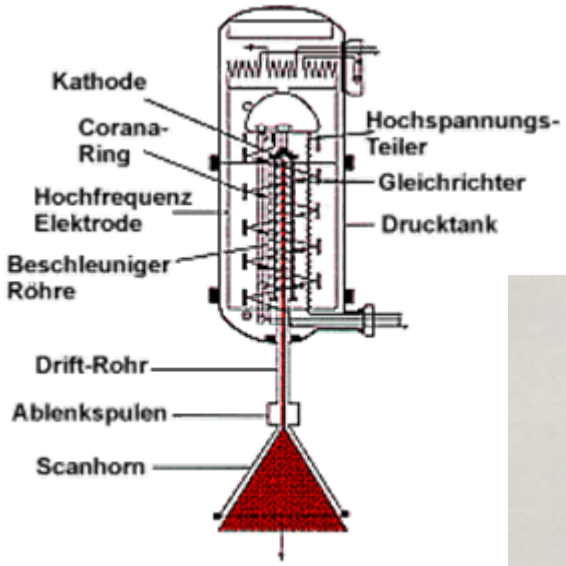

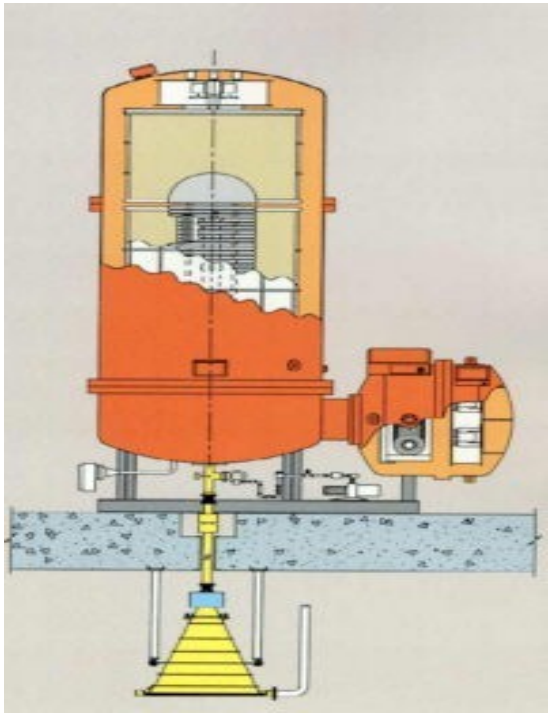

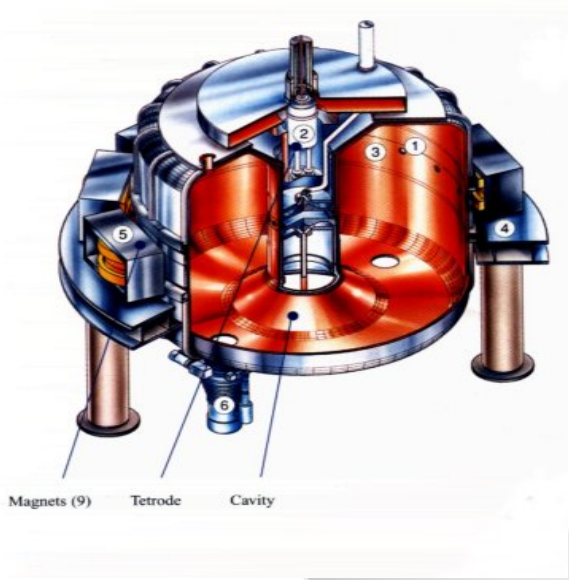

More than 1300 industrial units

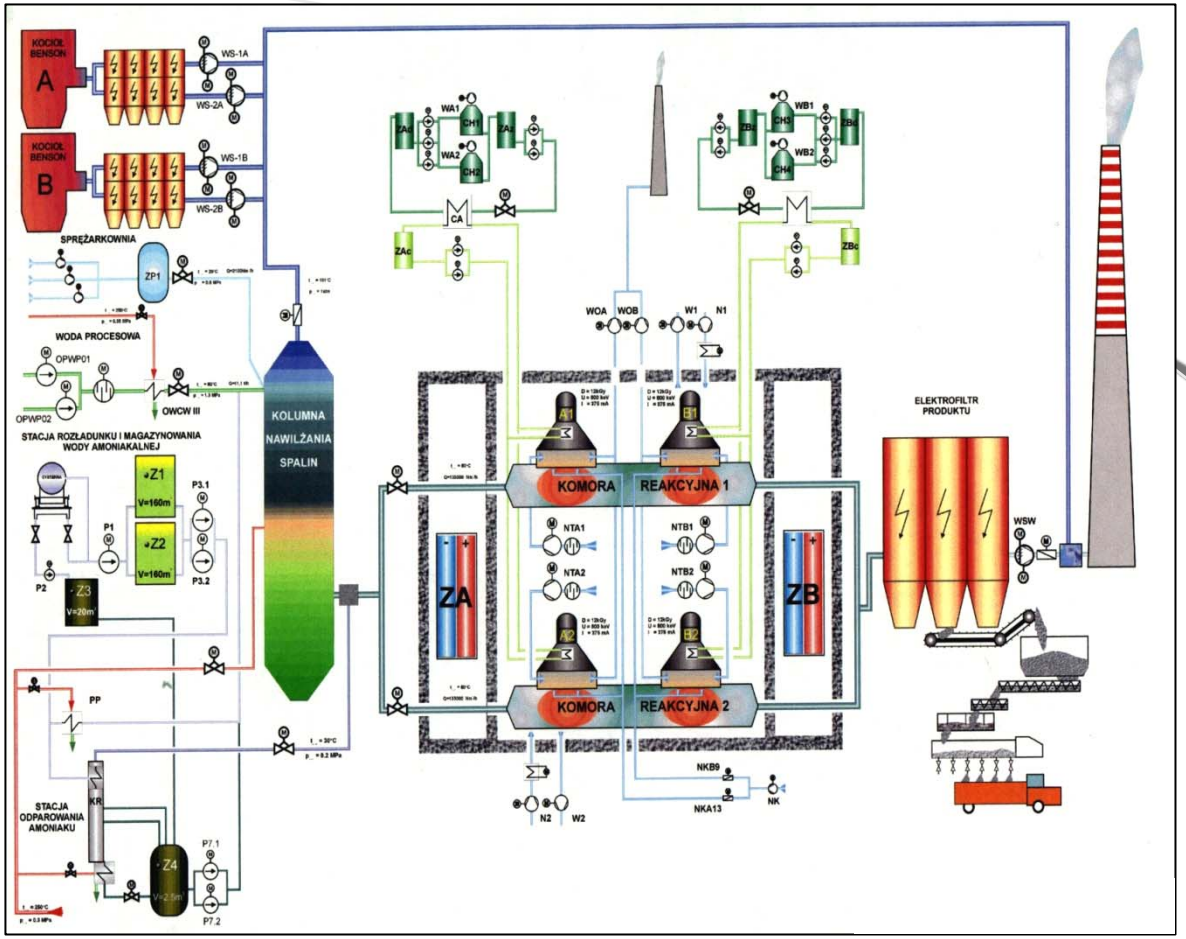

Source: A.G. Chmielewski, E. Iller et al.: Modern Power Systems, 53-54 (May 2004)

Comparison of different sources

Plasma sources – low pressure and one atmosphere pressure systems

Table 3. Plasma sources and their parameters.

Physics	Pressure (mbar)	n_e (cm^{-3})	T_e (eV)	Bias	Application
Dc glow	10^{-3}–100				
cathode region			100	Yes	Sputtering, deposition, surface elementary
negative glow		10^{12}	0.1	No	Chemistry, radiation
positive column		10^{11}	1–10	No	Radiation
hollow cathode	10^{-2}–800	10^{12}	0.1	No	Radiation, chemistry
magnetron	10^{-3}			Yes	Sputtering
Arc, hot cathode					
external heating low voltage	1	10^{11}	0.1	No	Radiation
internal heating	1000	10^{13}	0.1	No	Radiation welding
Focus	10		keV		Radiation
Rf capacitive					
low pressure	10^{-3}–10^{-1}	10^{11}	1–10	Yes	Processing, sputtering
moderate pressure	10^{-1}–10	10^{11}	1–10	No	Processing, deposition
hollow cathode	1	10^{12}	0.1	No	Processing, radiation
magnetron	10^{-3}			Yes	Sputtering
Rf inductive	10^{-3}–10	10^{12}	1	No	Processing, etching
helicon	10^{-4}–10^{-2}	10^{13}	1	No	Processing
MW					
closed structure	1000	10^{12}	3	No	Chemistry
SLAN	1000	10^{11}	5	No	Processing
open structure					
surfatron	1000	10^{12}	5	No	Processing
planar	100	10^{11}	2	No	Processing
ECR	10^{-3}	10^{12}	5	No	Processing
Electron beam					
BPD	10^{-2}–1	10^{12}	1	No	Processing
Dielectric barrier discharge	1000	10^{14}	5	No	Ozone, processing chemisry

Source: H Conrads M Schmidt „Plasma generation and plasma sources”, Plasma sources sci. And techn. 9 (2000), pp. 441-454

Plasma sources – low pressure and one atmosphere pressure systems

Table I. Classification of Discharge Types

	P/Q, J/l	P, W/cm^3	T_{max}, K	u, m/s	h, mm	air	f, kHz
Pulsed corona	0.1–100	1–50	room	≤50	≤350	x	1–1000
Pulsed glow discharge	100–500	10–500	≤600	10–200	10–50	x	0.05–5
Glow discharge	1–100	50–500	room	10–150	5–20	x	cw
Micro-hollow cathode discharge		≤10^4	≈2000	slow	1–2	x	cw, RF
Plasma torch		≈10^4	≈3000	100	20		cw
DBD(I)		1–50	room	slow	1–3	x	0.05–100
DBD(II)		1–50	room	slow	1–5	x	1–5
RF discharge		3–30	≤600	5–10	1–2		13560
Microwave discharge				≈10		x	2.45 10^6

Source: A. P. Napartovich: „Overview of Atmospheric Pressure Discharges Producing Nonthermal Plasma”, Plasmas and Polymers, Vol. 6, Nos. 1/2, June 2001

Plasma sources – low pressure and one atmosphere pressure systems

Parameters	Corona Discharge	DBD	APPJ	Atmospheric glow MHCD
Method and Type	Sharply pointed electrode	Dielectric barrier cover on electrodes	RF capacitvely coupled	DC glow with micro hollow cathode electrode
Excitation	Pulsed DC	AC or RF	RF 13.5 MHz	DC
Pressure (bar)	1bar	1bar	760 torr	1bar
Electron energies (eV)	5 variable	1-10	1-2	……
Electron Density, cm^{-3}	10^{9}-10^{13} variable	≈10^{12} -10^{15}	10^{11}-10^{12}	
Breakdown Voltage (kV)	10-50	5-25	0.05-0.2	……
Scalability & Flexibility	No	Yes	Yes	Yes
T_{max} Temp T (K)	Room	Average gas Temp (300)	400	2000
Gas	……	N_2+ O_2+ NO+ Rare gas/Rare gas halides	Helium, Argon	Rare gas Rare gas/Rare gas halides

Table 3: Plasma properties of atmospheric discharge schemes

Source: Vijay Nehra, Ashok Kumar and H K Dwivedi: „ Atmospheric Non-Thermal Plasma Sources" International Journal of Engineering, Volume (2) : Issue (1)

Lecture outline

- Introduction
- Plasma sources – low pressure and one atmosphere pressure systems
- Typical reactor configurations – already done !
- Plasma reactor as electric load – equivalent circuit
- Power supply system configurations
- Efficiency and power measurement systems and circuits
- Summary

Lecture outline

- Introduction
- Plasma sources – low pressure and one atmosphere pressure systems
- Typical reactor configurations – already done !
- Plasma reactor as electric load – equivalent circuit
- Power supply system configurations
- Efficiency and power measurement systems and circuits
- Summary

Plasma reactor as electric load – equivalent circuit

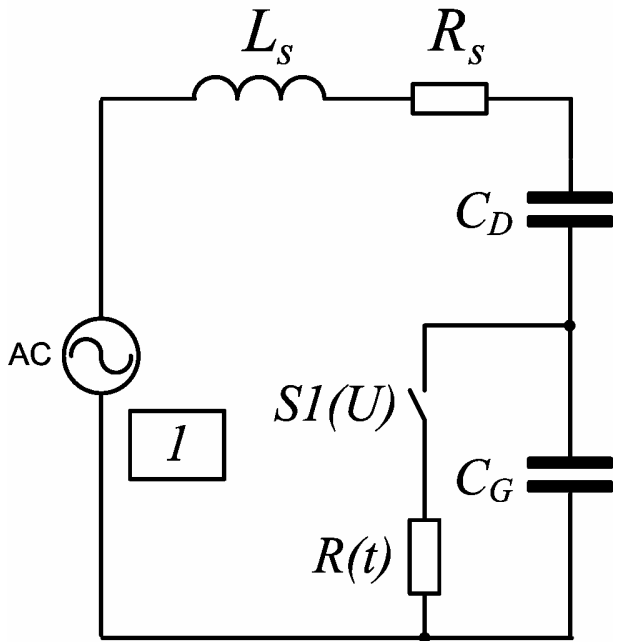

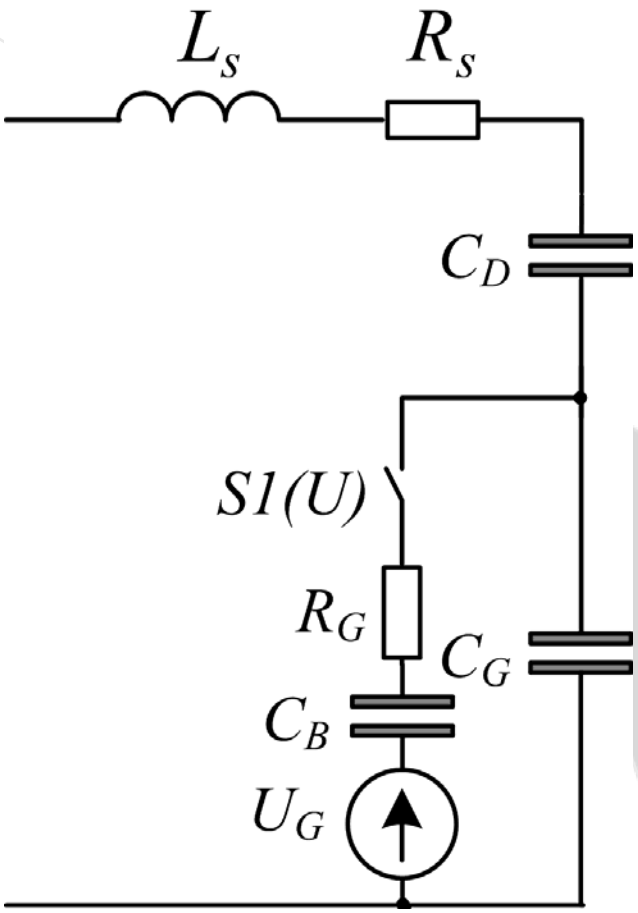

Plasma reactor as electric load – equivalent circuit

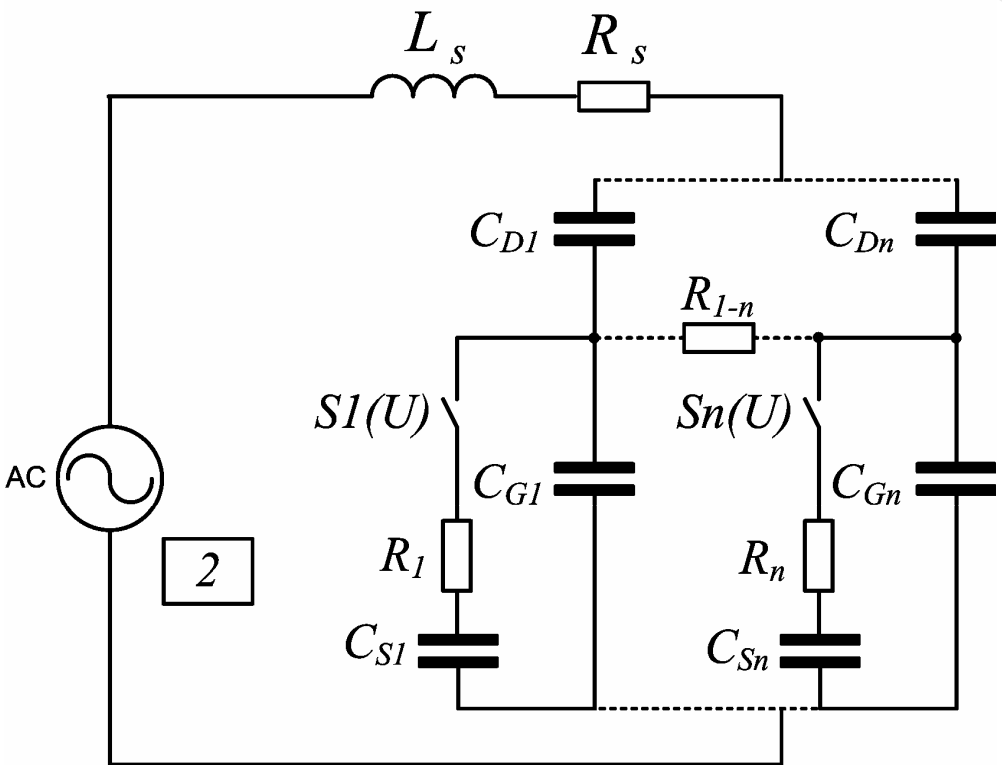

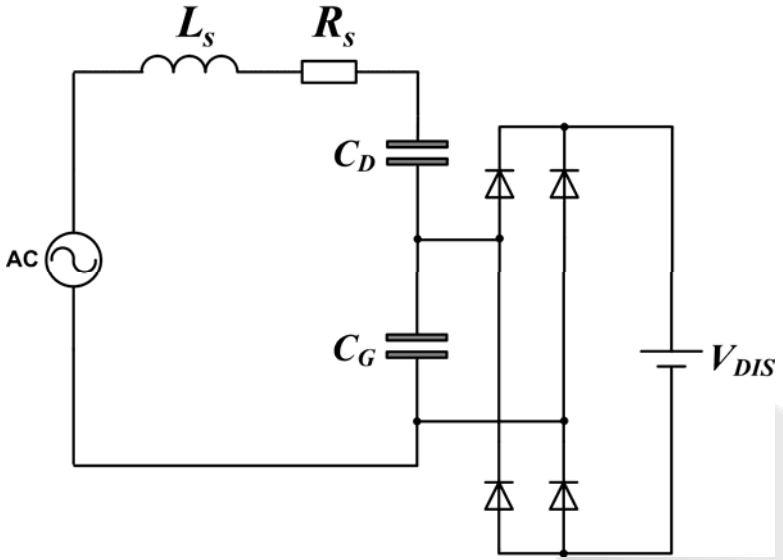

Plasma reactor as electric load – equivalent circuit

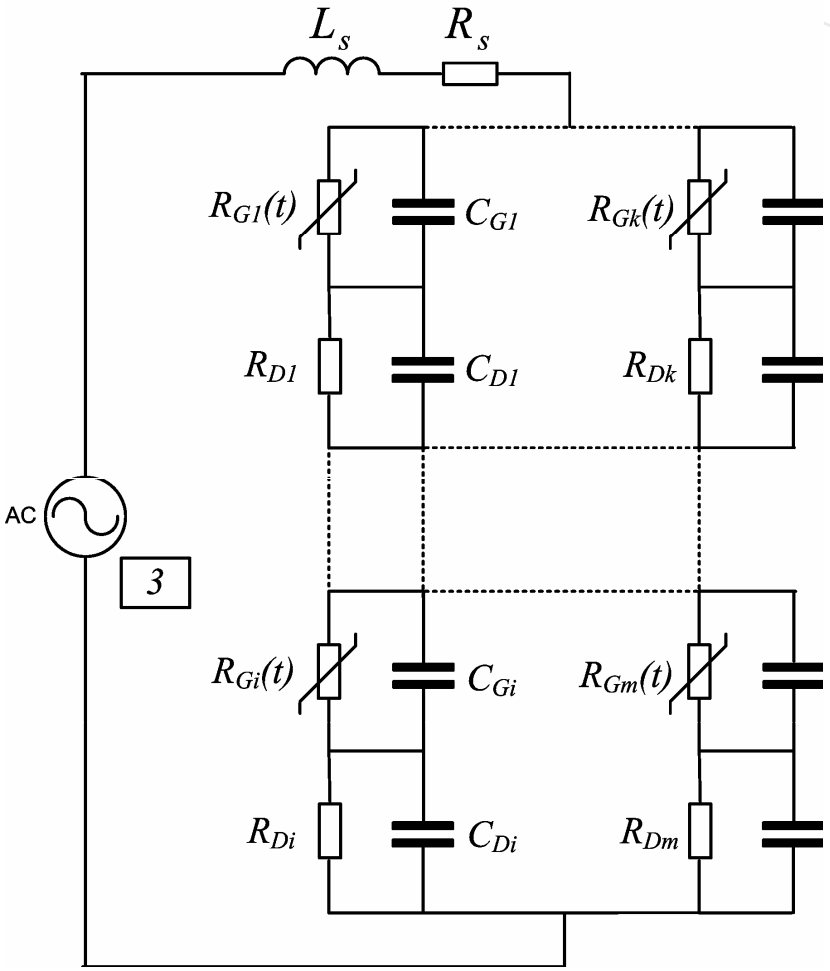

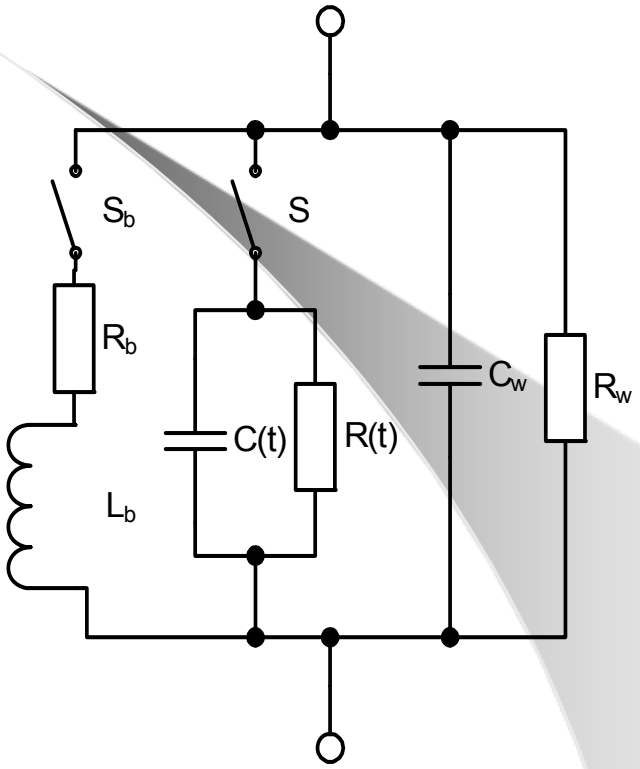

Source: B. G. Rodríguez-Méndez, R. López-Callejas, R. Peña-Eguiluz, A. Mercado-Cabrera, R. Valencia-Alvarado, S. R. Barocio, A. de la Piedad-Beneitez, J. S. Benítez-Read, and J. O. Pacheco-Sotelo: A MODEL OF PLASMA DISCHARGES IN PRERCING REGIME FOR WATER TREATMENT, 25th IASTED, Feb. 6-8, Lanzarote, Spain

A. Mizuno, Y. Yamazaki, S. Obama, E. Suzuki, K. Okazaki: „Effect of Voltage Waveform on Partial Discharge in Ferroelectric Pellet Layer for Gas Cleaning", IEEE Transactions on Industry Applications, Vol. 29, No 2, March/April (1993)

Lecture outline

- Introduction
- Plasma sources – low pressure and one atmosphere pressure systems
- Typical reactor configurations – already done !
- Plasma reactor as electric load – equivalent circuit
- Power supply system configurations
- Efficiency and power measurement systems and circuits
- Summary

Power supply system configurations

600 Watts RF Power at 13.56 MHz for Industrial and Laboratory Applications.

Class Of Operation
Class B

Frequency Of Operation
13.56 MHz

Frequency Stability
0.005% or better

RF Power Output
600 Watts nominal into 50 Ohms

Operation as amplifier. Contact T&C for further details.
Output as amplifier in MGC/Burst Mode
0 dBm IN, 1V (5 or 10V) CTL IN pin 5
100W +/-2W

RF Input Drive (as amplifier)
Typical range -20 dBm to 0 dBm
1V (5 or 10V) CTL IN pin 5

RF Input Drive for AGC
Recommended +0 to +3 dBm for the best operation

Input Drive Source(amplifier)
Signal or function generator, analog computer input capable of up to 2 Vp-p @ 50 Ohm

Internal RF Source
Crystal oscillator at 13.56 MHz

Input and Output Impedance
50 Ohm

IN / OUT VSWR
1.2:1 max - input
3:1 max - output

Output VSWR Protection
80 Watts max reflected power limit. Automatic, limits typically within 0.5 ms after reverse power reaches 80 Watts or power amplifier current preset limit.

Harmonic Level @ 600 W
Better then - 40 dBc

Spurious Output
- 50 dBc

Output Blanking
For pulsed applications, T&C amplifiers and generators offer blanking of the output signal for minimum noise RF spectrum

Dynamic Power Range
1 to 600 W, settings within +/- 3W
NOTE! Output cutoff below 1W.

Output Settings & Control (Communications)
SubD 25 Analog and Digital I/O .Rear Panel

NOTE! Check which scale is selected for your unit. Available scales:
1 V=100 W
5 V=nominal power (default, analog port)
10 V=nominal power (default, software)

D-COM "Digital Communication" Port:
RS-232
RS-485
USB 2.0

Pulse Specifications
Pulse Width from 2 µs to continuous, user defined.

RF Power Margin
(Open Loop Max Power/Rated Power)-1)*100
20 %

RF Connectors
INPUT BNC Female
OUTPUT N Female
BLANKING BNC Female
Rear Panel

AC Power Connection
IEC Standard Power Entry followed by RFI filter.
Filter range 0.1 to 30 MHz min.

AC Circuit Protection
Internally fused on the main DC Power Supply, 15 A.

AC Input Current (RMS)
RF Out 550 W:
100-120 V ac, 50-60 Hz, 11 A
200-240 V ac, 50-60 Hz, 5.5 A

Cooling
Forced air, temperature controlled, heatsink temperature monitored for equipment safety at 70C limit.

Dimensions
L 458 mm x W 216 mm x H 140 mm
(18" x 8.5" x 5.5")

Weight
9.0 kg, 20 lbs.

Case
Front Panel: T&C White - Powder Coated Steel.
Stainless Steel Covers and Chassis.
Chassis designed to meet EMI RFI shielding requirements

Mounting
Half Rack, 3U high.

Optional: Rack Mount Kit, Adapter Kit, Coupling Screws.

Environmental conditions
Temp.: 10° to 40° C ambient
Humidity: 80%

Equipment intended for ISM applications in laboratory and light industrial environment.

Power supply system configurations

Microwave output 1.5kW×1 (2M164×1) Oscillation frequency 2450±30MHz Plasma generating system 1 system Exhaust pump 3000L/min Throughput 40 to 670Pa (0. 3 to 5Torr) Chamber dimensions Φ600×Length 800mm

Power supply system configurations – DBD reactors

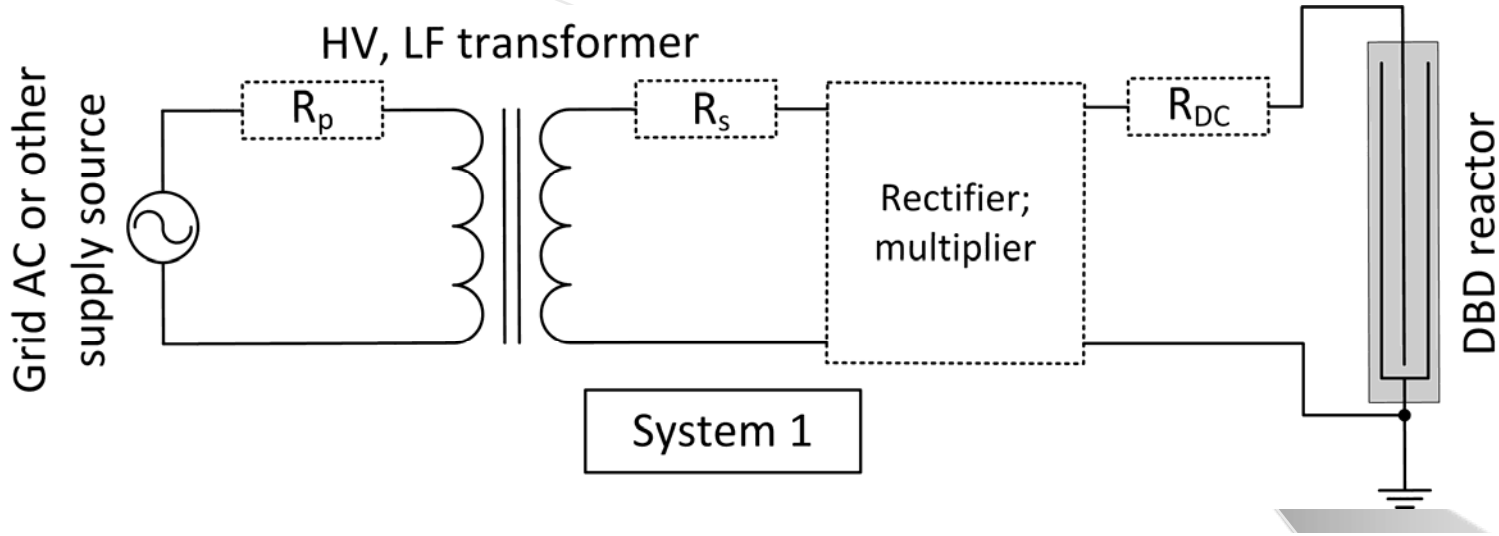

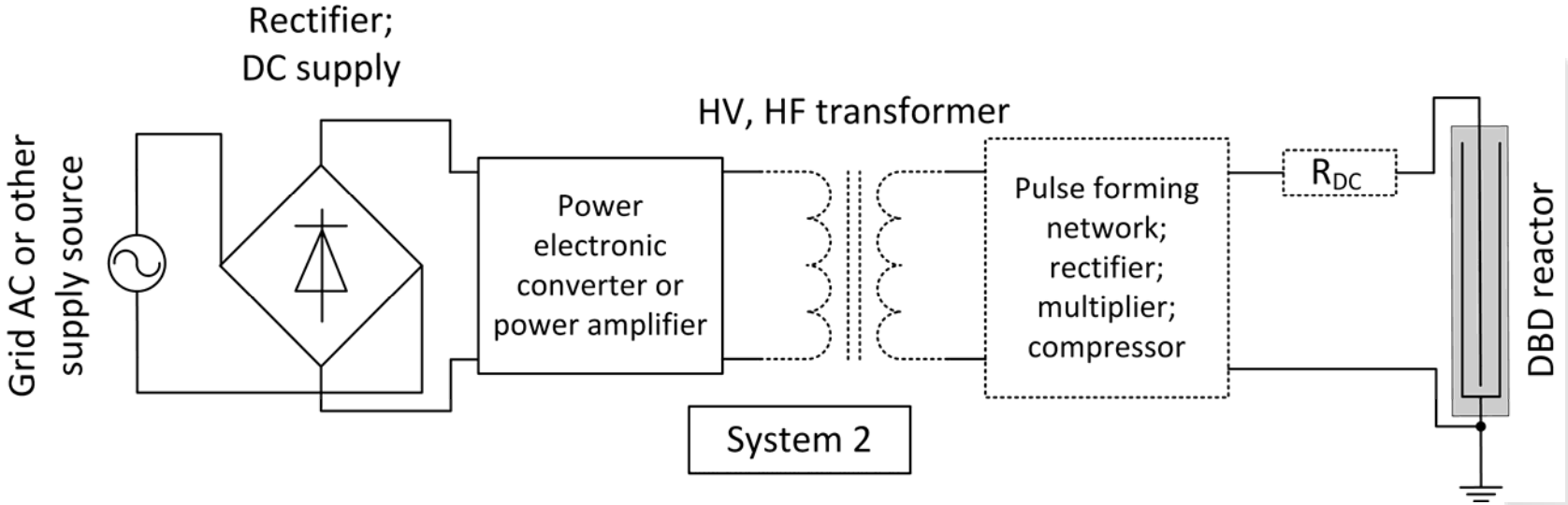

Power supply system configurations

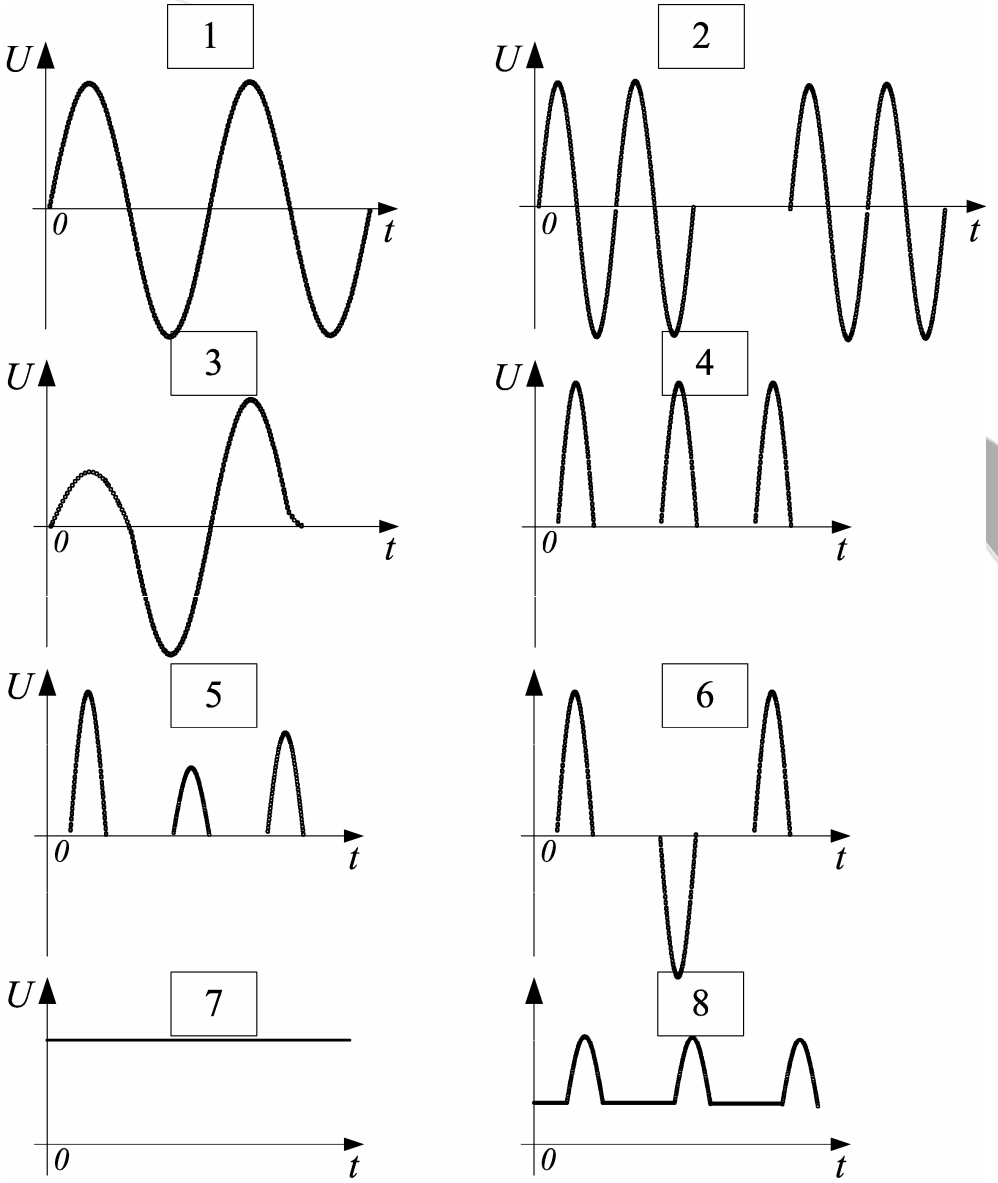

Power supply system configurations

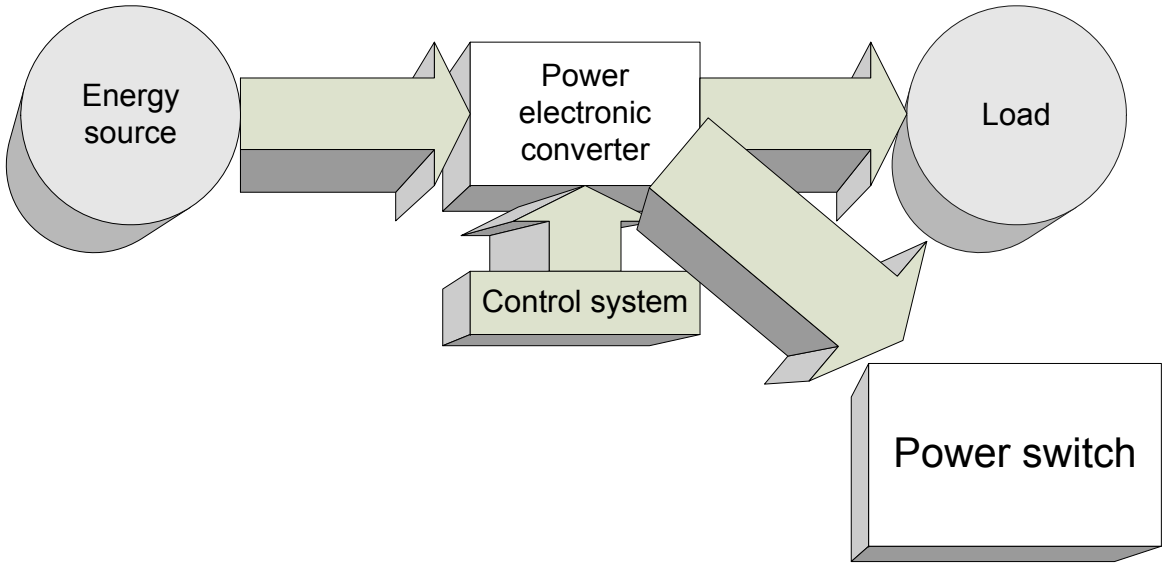

Ideal switch:

1) $I_c = \infty$
2) $U_{block} = \infty$
3) $U_{cond} = 0$
4) $t_r, t_f = 0$
5) Conduction loss = 0W
6) Switchning loss = 0W

Power electronic devices – solid state switches

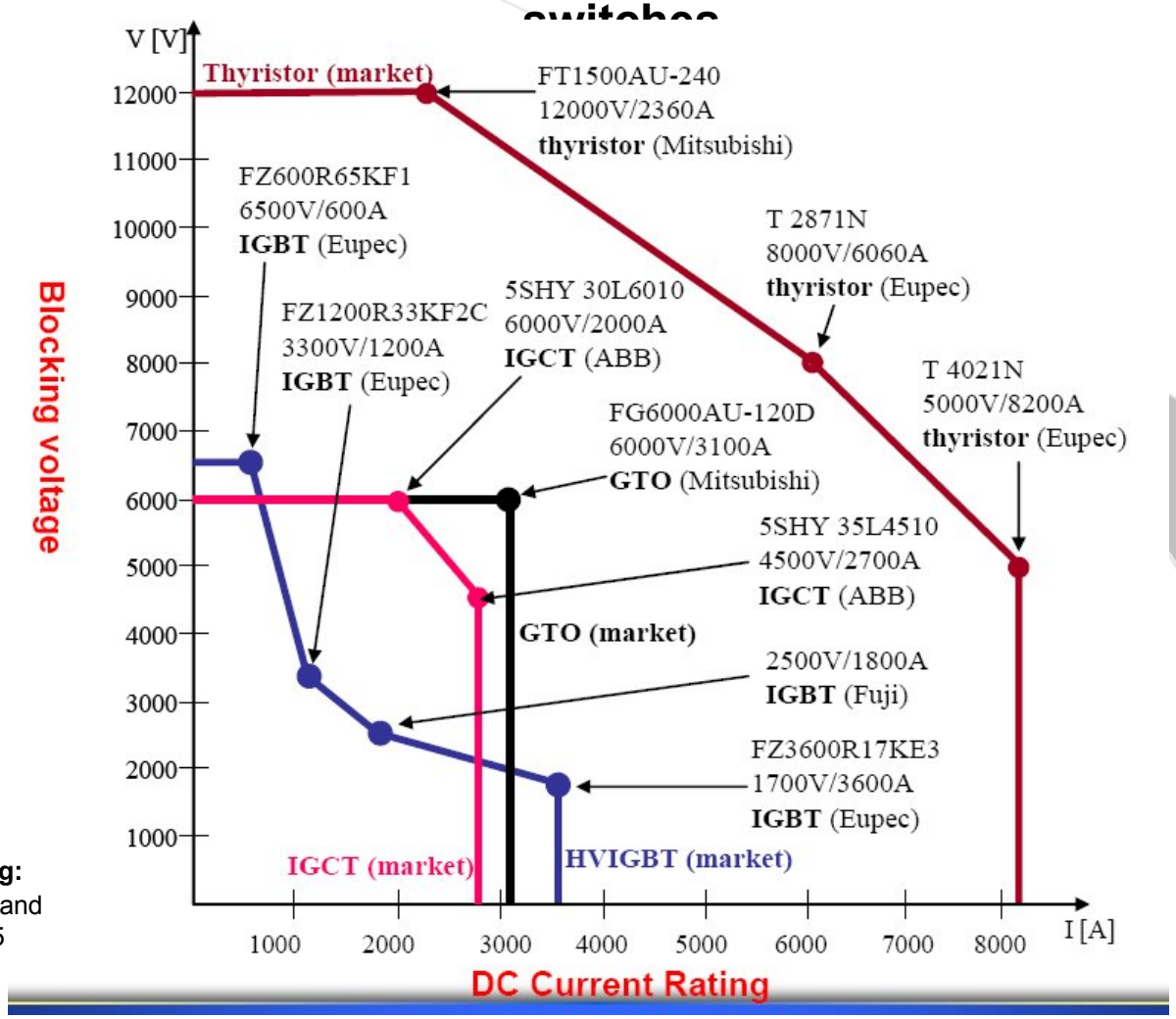

Source: **Alex. Q. Huang:** Power semiconductors and wind power, 04.05.2005

Power supply system configurations

IXYS RF

DE475-102N21A
RF Power MOSFET

- N-Channel Enhancement Mode
- Low Q_g and R_g
- High dv/dt
- Nanosecond Switching
- 30MHz Maximum Frequency

V_{DSS} = 1000 V
I_{D25} = 24 A
$R_{DS(on)}$ ≤ 0.45 Ω
P_{DC} = 1800W

Symbol	Test Conditions	Maximum Ratings	
V_{DSS}	T_J = 25°C to 150°C	1000	V
V_{DGR}	T_J = 25°C to 150°C; R_{GS} = 1 MΩ	1000	V
V_{GS}	Continuous	±20	V
V_{GSM}	Transient	±30	V
I_{D25}	T_c = 25°C	24	A
I_{DM}	T_c = 25°C, pulse width limited by T_{JM}	144	A
I_{AR}	T_c = 25°C	21	A
E_{AR}	T_c = 25°C	30	mJ
dv/dt	$I_S \le I_{DM}$, di/dt ≤ 100A/µs, $V_{DD} \le V_{DSS}$, $T_J \le 150°C$, R_G = 0.2Ω	5	V/ns
	I_S = 0	>200	V/ns
P_{DC}		1800	W
P_{DHS}	T_c = 25°C Derate 4.0W/°C above 25°C	730	W
P_{DAMB}	T_c = 25°C	4.5	W
R_{thJC}		0.08	C/W
R_{thJHS}		0.20	C/W

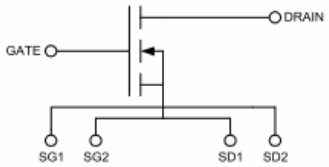

$T_{d(on)}$		5	ns
T_{on}	V_{GS} = 15 V, V_{DS} = 0.8 V_{DSS}	5	ns
$T_{d(off)}$	I_D = 0.5 I_{DM} R_G = 0.2 Ω (External)	5	ns
T_{off}		8	ns

Power electronic devices – solid state switch stacks

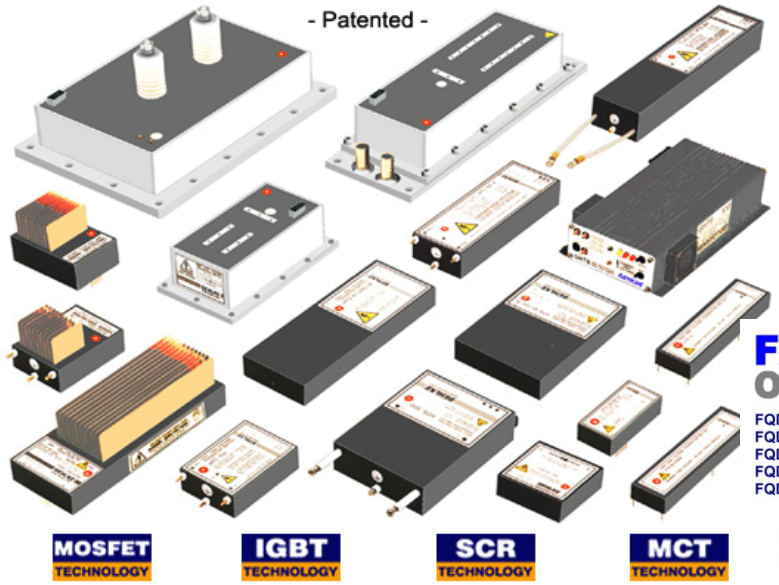

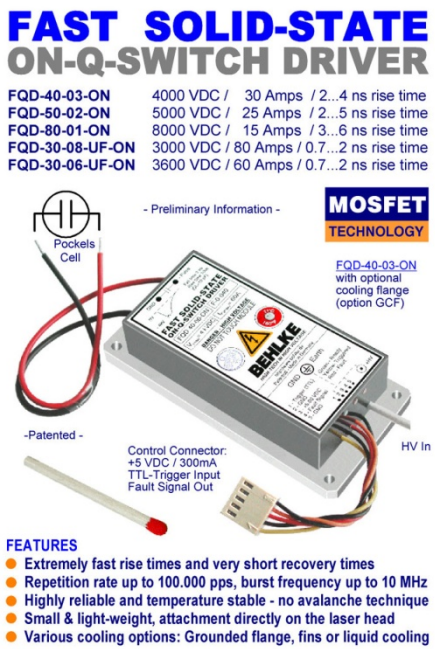

Source: **Behlke**

FEATURES

- Voltage up to 120 kV
- Pk. currents up to 32 kA
- di/dt's up to 32 kA/ µs
- Rise times 1 ns ... 500 ns
- Peak power up to 256 MW
- Galvanic isolation
- TTL control input
- Integrated thermotrigger
- Various cooling options
- Very small & light weight
- Highly reliable

High power switches – mechanical, gaseous, vacuum, spark gap

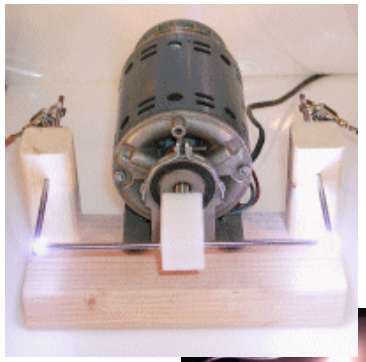

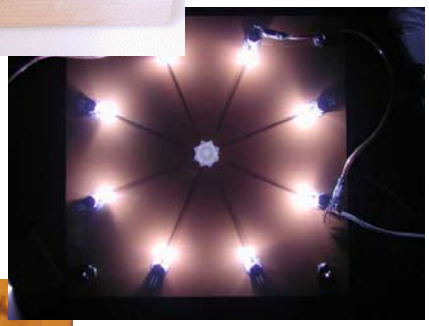

The krytron uses arc discharge to handle very high voltages and currents (several kV and several kA peak). The krytron is a development of triggered spark gaps originally developed for radar transmitters during World War II. There are four electrodes in a krytron. Two are conventional anode and cathode. One is a keep-alive electrode, arranged to be close to the cathode. The keep-alive has a low positive voltage applied, which causes a small area of gas to ionize near the cathode. High voltage is applied to the anode, but primary conduction does not occur until a positive pulse is applied to the trigger electrode ("Grid" in the image above). Once started, arc conduction carries a considerable current.
Problems: frequency, materials, life expectancy, triggering circuitry (500V – 2kV to trigger)
Sprytron: vacuum trytron

Krytron: up to 100kV, kA
Problems: frequency, life expectancy, triggering

Mechanical switches: up to 100kV, kA
Problems: mechanical wear, materials

Source: Easier to Build Rotary Spark Gap Designs by Terry Blake

High power switches – mechanical, gaseous, vacuum, spark gap

Thyratrons evolved in the 1920s from early vacuum tubes such as the UV-200, which contained a small amount of argon gas to increase its sensitivity as a radio signal detector; and the German LRS Relay tube, which also contained argon gas. Gas rectifiers which predated vacuum tubes, such as the argon-filled General Electric "Tungar bulb" and the Cooper-Hewitt mercury pool rectifier, also provided an influence. A thyratron is basically a "controlled gas rectifier". Irving Langmuir and G. S. Meikle of GE are usually cited as the first investigators to study controlled rectification in gas tubes, circa 1914. The first commercial thyratrons didn't appear until circa 1928. Modern applications include pulse drivers for pulsed radar equipment, high-energy gas lasers, radiotherapy devices, and in Tesla coils and similar devices. Thyratrons are also used in high-power UHF television transmitters, to protect inductive output tubes from internal shorts, by grounding the incoming high-voltage supply during the time it takes for a circuit breaker to open and reactive components to drain their stored charges. This is commonly called a "crowbar" circuit.

Thyratrons have been replaced in most low and medium-power applications by corresponding semiconductor devices known as Thyristors (sometimes called Silicon-controlled rectifiers, or SCRs) and Triacs. However, switching service requiring voltages above 20 kV and involving very short risetimes remains within the domain of the thyratron. Variations of the thyratron idea are the krytron, the sprytron, the ignitron, and the triggered spark gap, all still used today in special applications.

Thyratron: tens of kV, tens of kA
Problems: life expectancy, materials

1. DC sources

Power supply system configurations

Switch mode power supplies: high- end

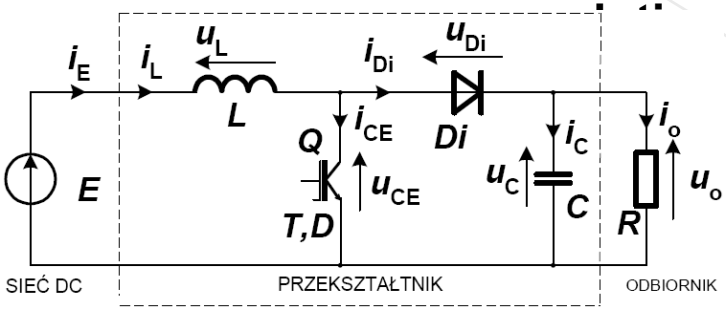

Line Filter → Power Factor Corrector → SMPS → Rectifier / Voltage multiplier

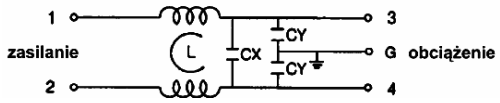

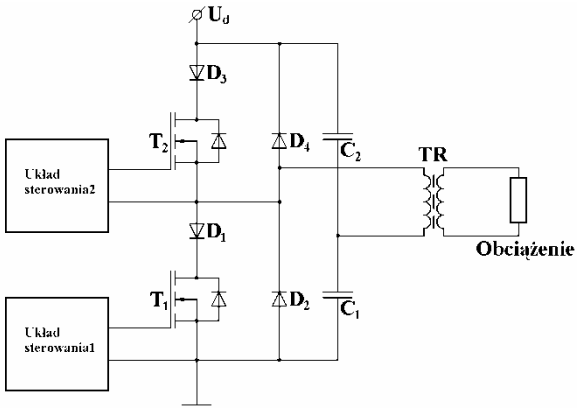

Zachodniopomorski Uniwersytet Technologiczny w Szczecinie

BALTICNET PLASMATEC

Wydział Elektryczny

www.we.zut.edu.pl

Power supply system configurations

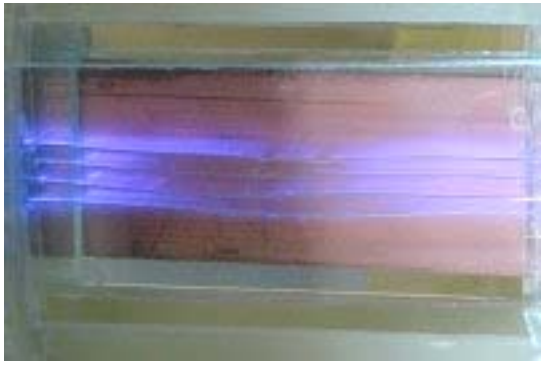

Voltage multiplier: Cockroft-Walton multiplier

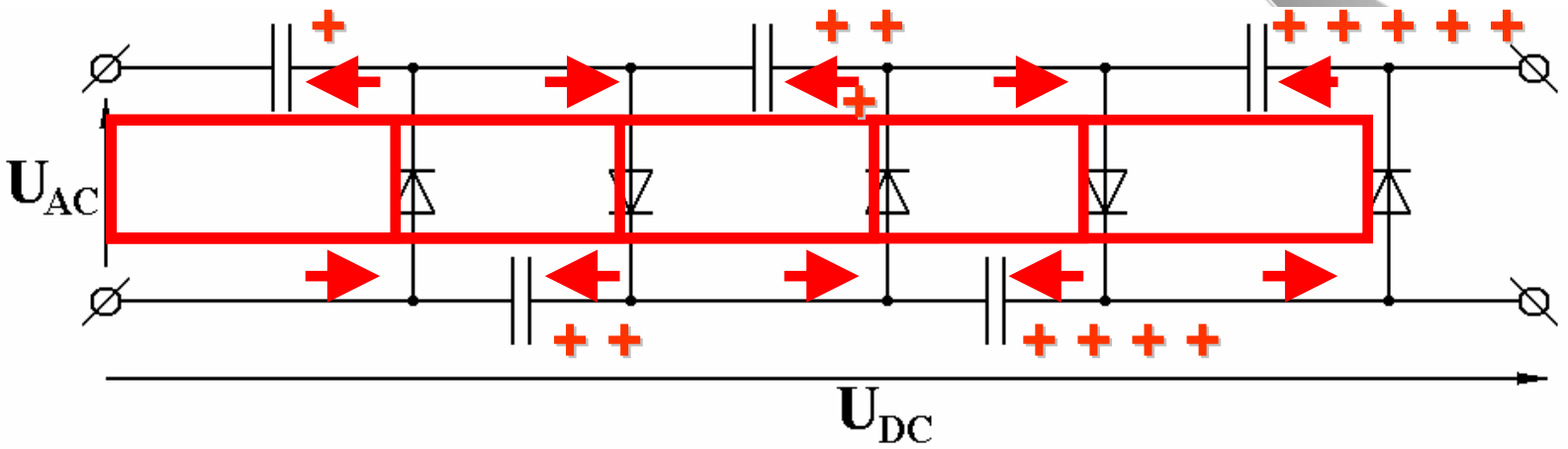

Voltage multiplier: Greinacher cascade

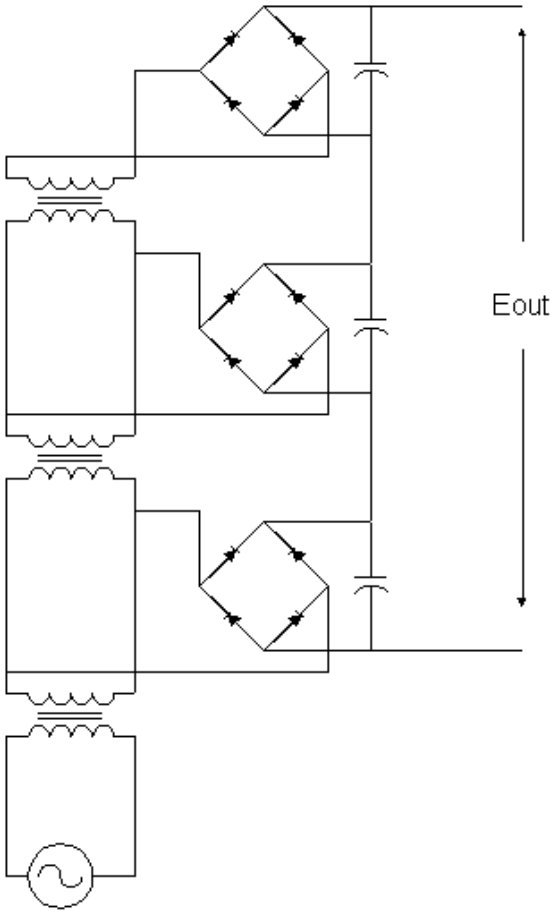

DC supply prototype

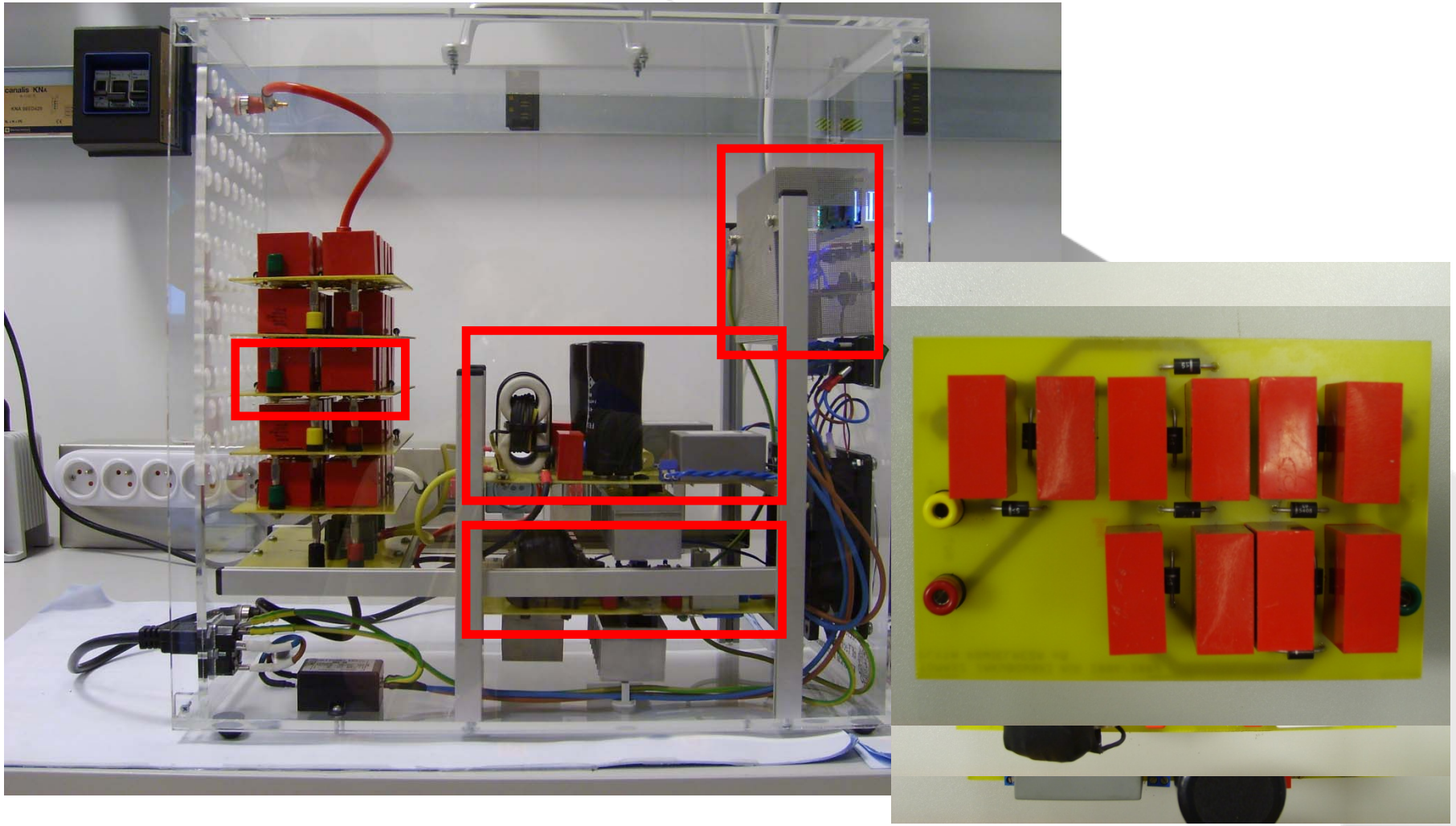

2. AC sources

Power supply system configurations

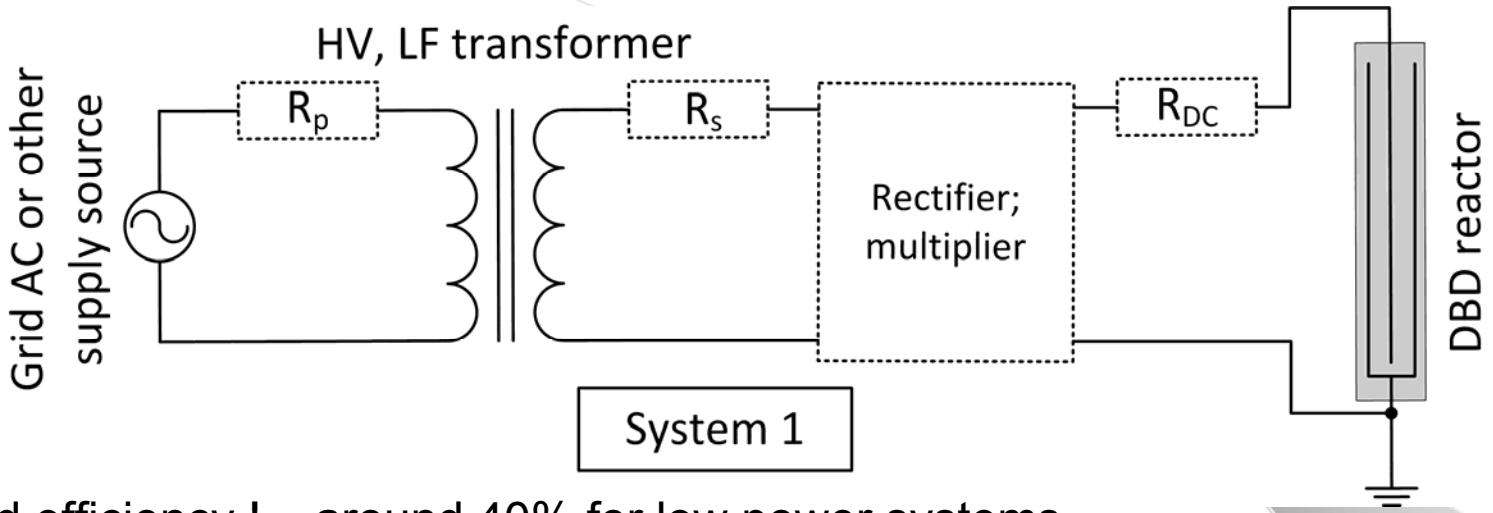

Limited efficiency ! – around 40% for low power systems
Up to 9x% for large power applications

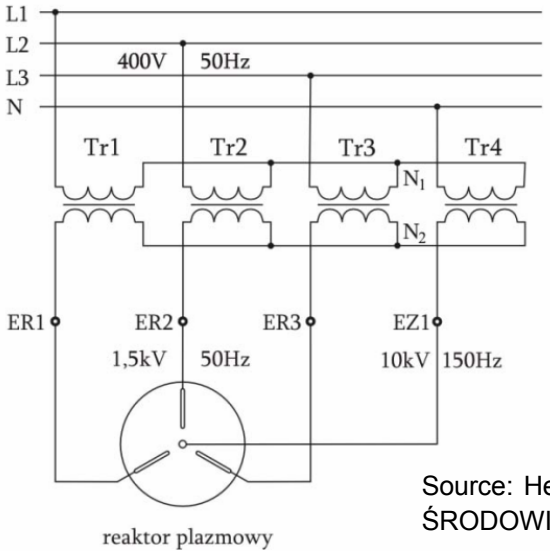

reaktor plazmowy

Rys. 4.5. Zdjęcie wnętrza zasilacza zintegrowanego o mocy 5kW

Source: Henryka Danuta Stryczewska: „TECHNOLOGIE PLAZMOWE W ENERGETYCE I INśYNIERII ŚRODOWISKA", Wydawnictwo Politechniki Lubelskiej Lublin 2009

Power supply system configurations

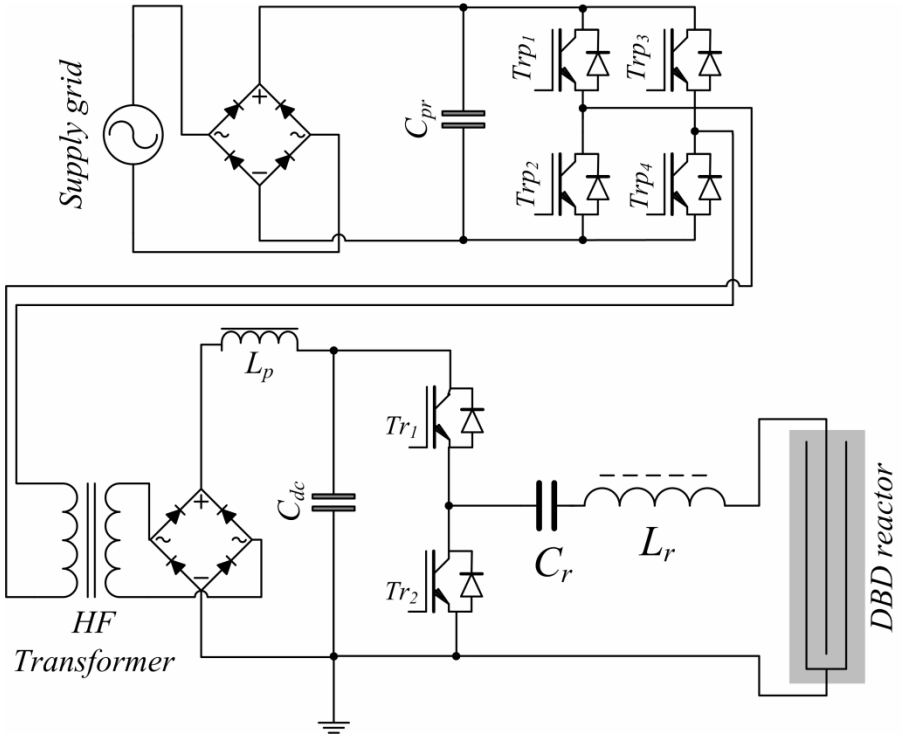

Power supply system configurations

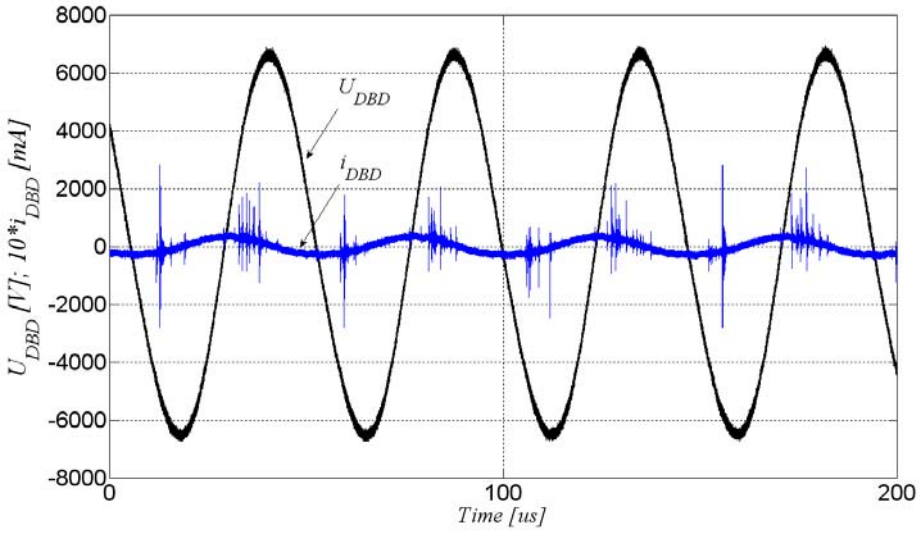

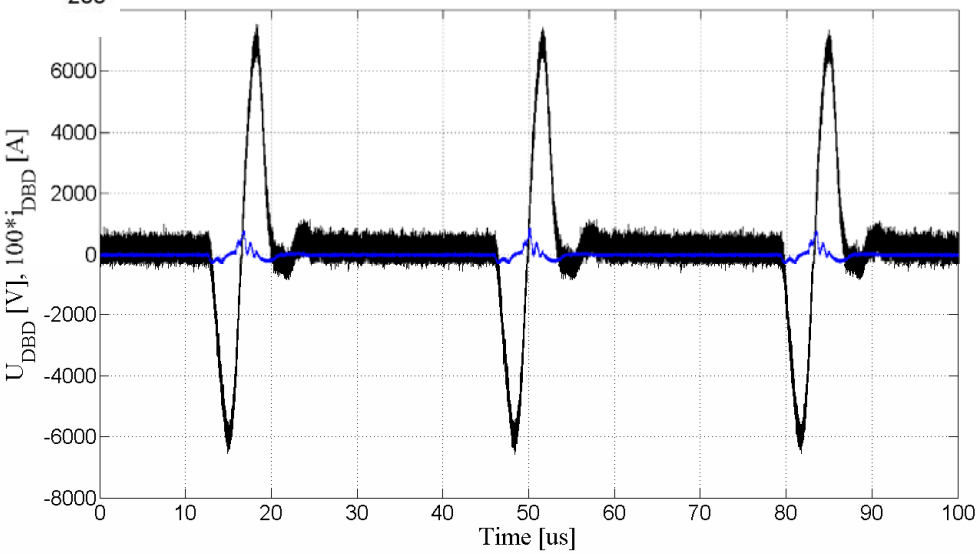

Power supply system configurations

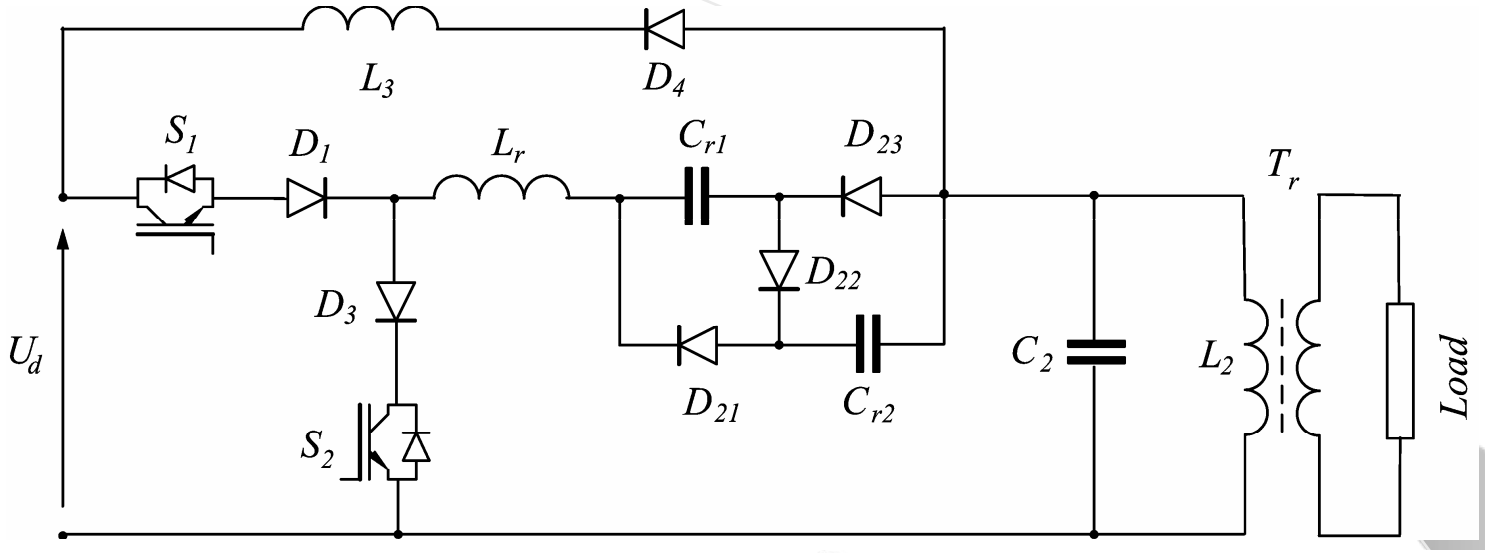

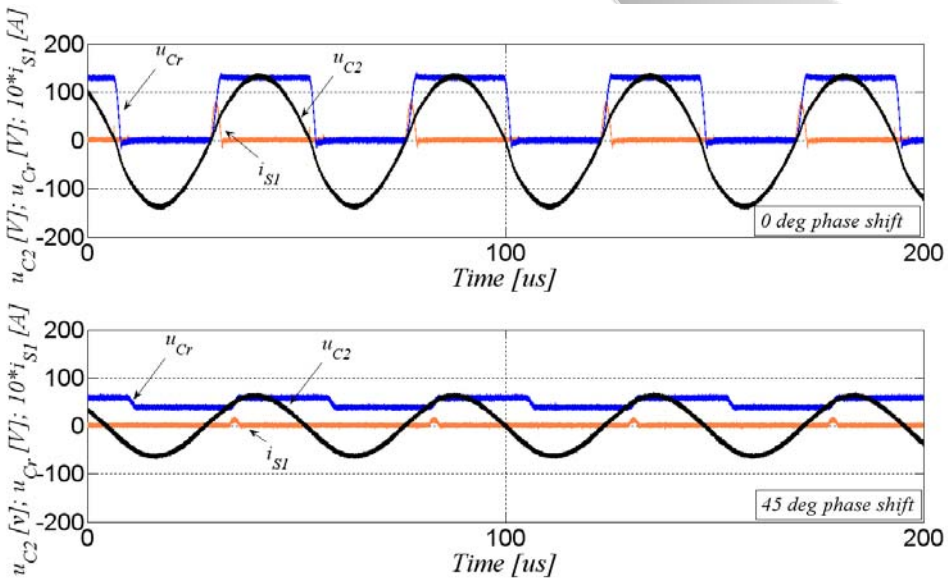

Power supply system configurations

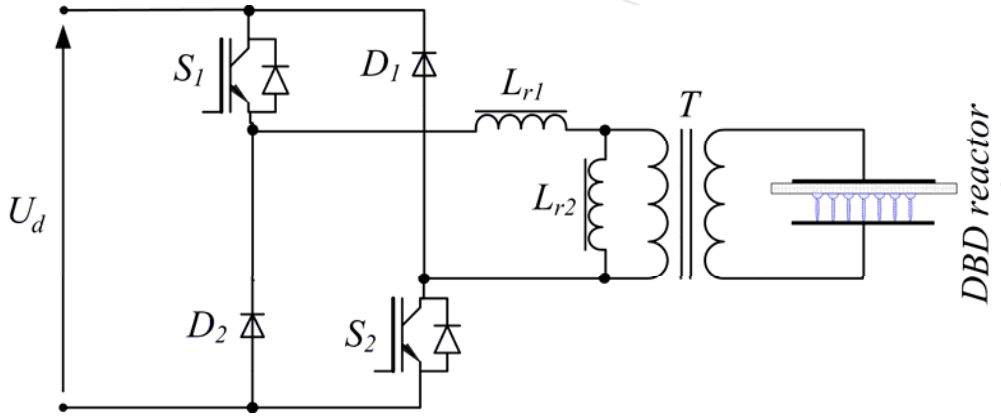

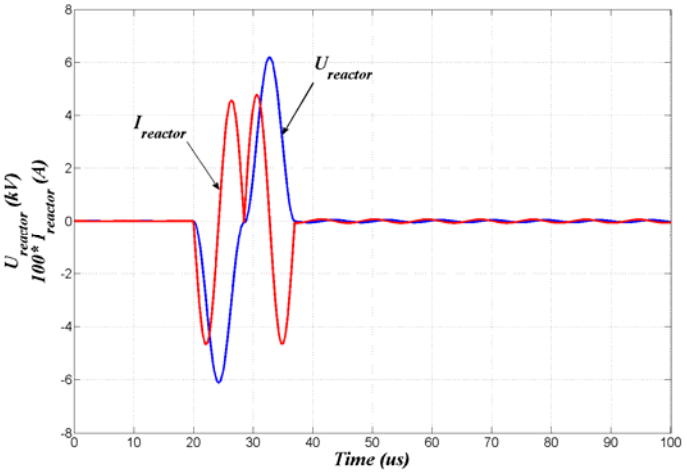

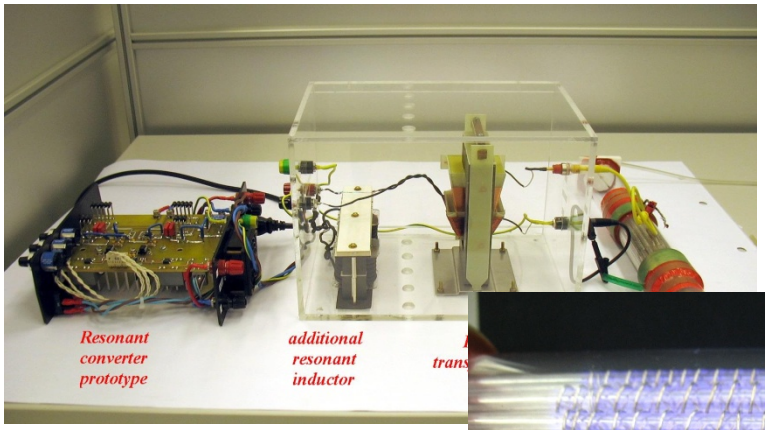

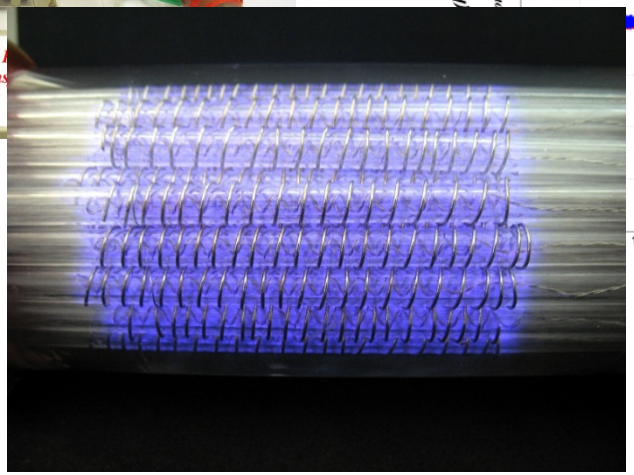

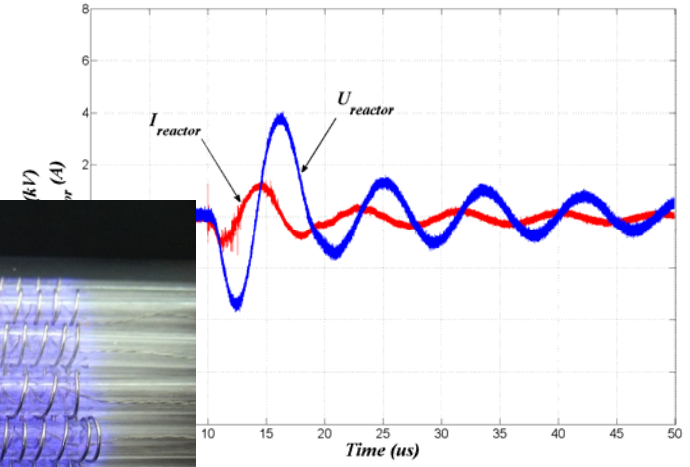

3. Pulsed sources

Power supply system configurations

- Solid state pulse power modulators (SSPPM) are used in physics research (plasma technology)
- Very high demands on voltage amplitude and pulse duration
- System topologies are known multiplying the output voltage / switch blocking voltage ratio (usually the factor is up to *f*=2)

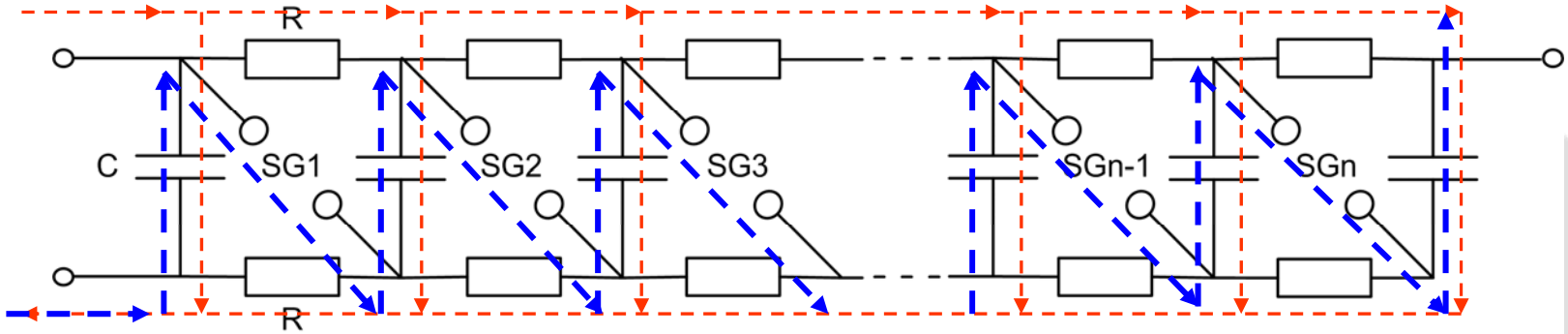

A classical Marx topology pulse power source [1]

[1] **E. Marx**, Patent DE455933, 13 Feb 1928

Power supply system configurations

- Solid state pulse power modulators (SSPPM) are used in physics research (plasma technology)
- Very high demands on voltage amplitude and pulse duration
- System topologies are known multiplying the output voltage / switch blocking voltage ratio (usually the factor is up to *f*=2)

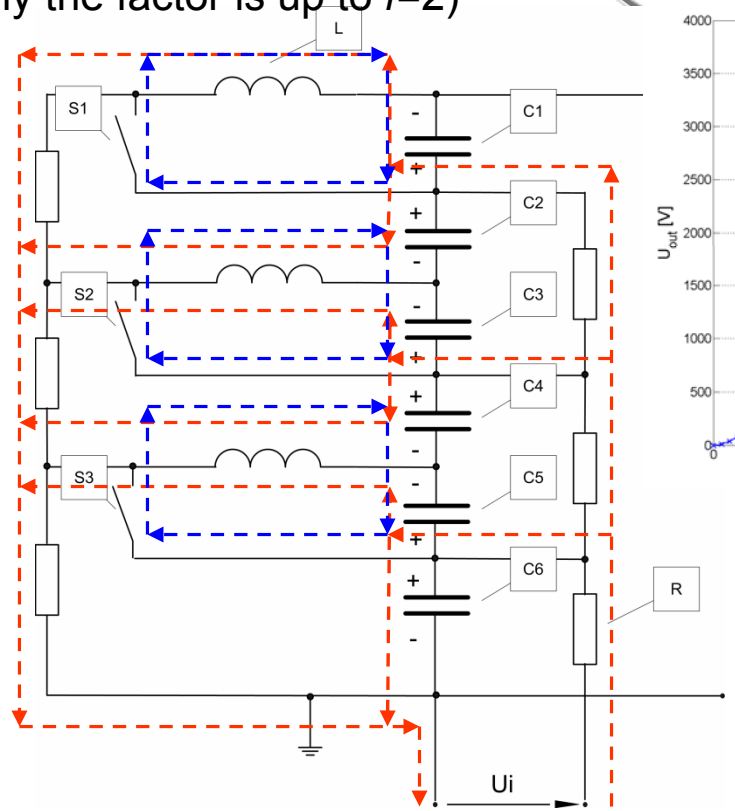

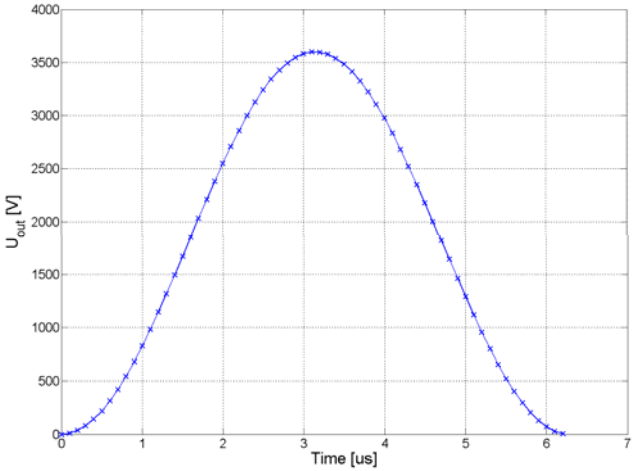

$$U_{out} = 3U_i\left(1-\cos\omega t\right)$$

[2] **R. A. Fitch *et al.*** , Patent US3366799, 30 Jan 1968 Electrical pulse generators as in [2]

Power supply system configurations

Proposed top

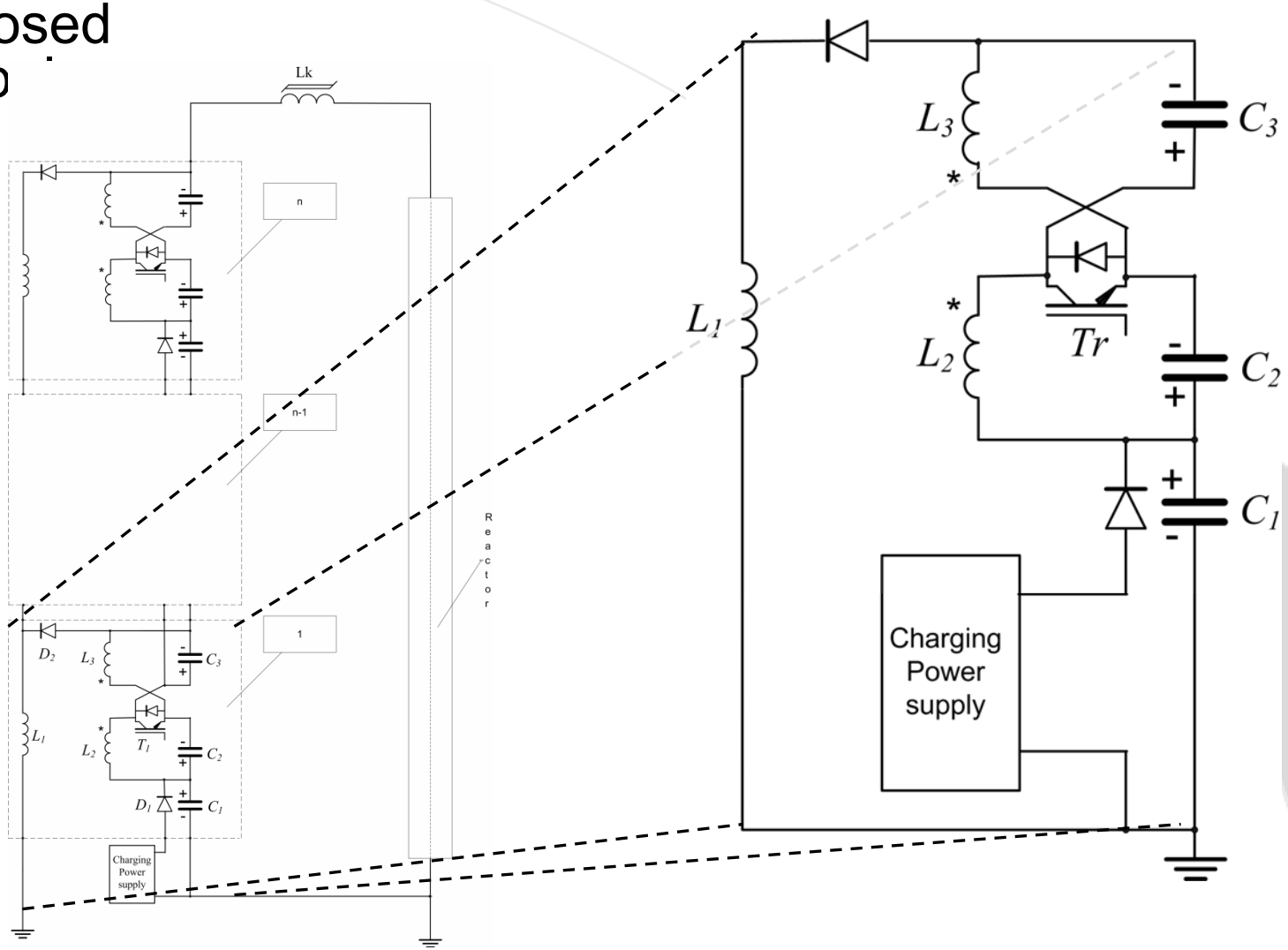

Power supply system configurations

Proposed topology:

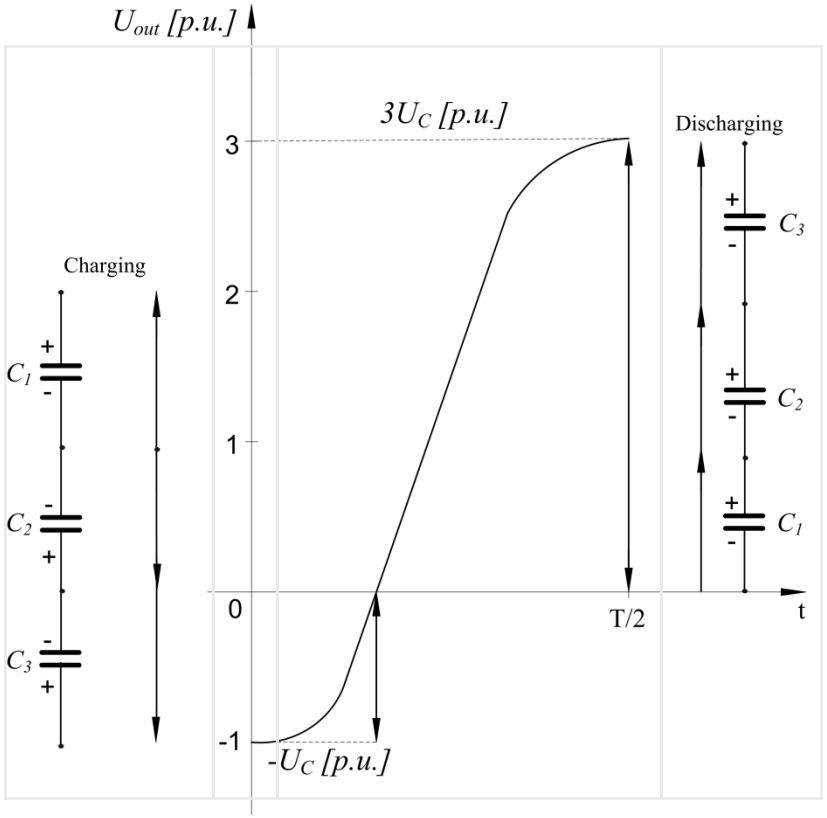

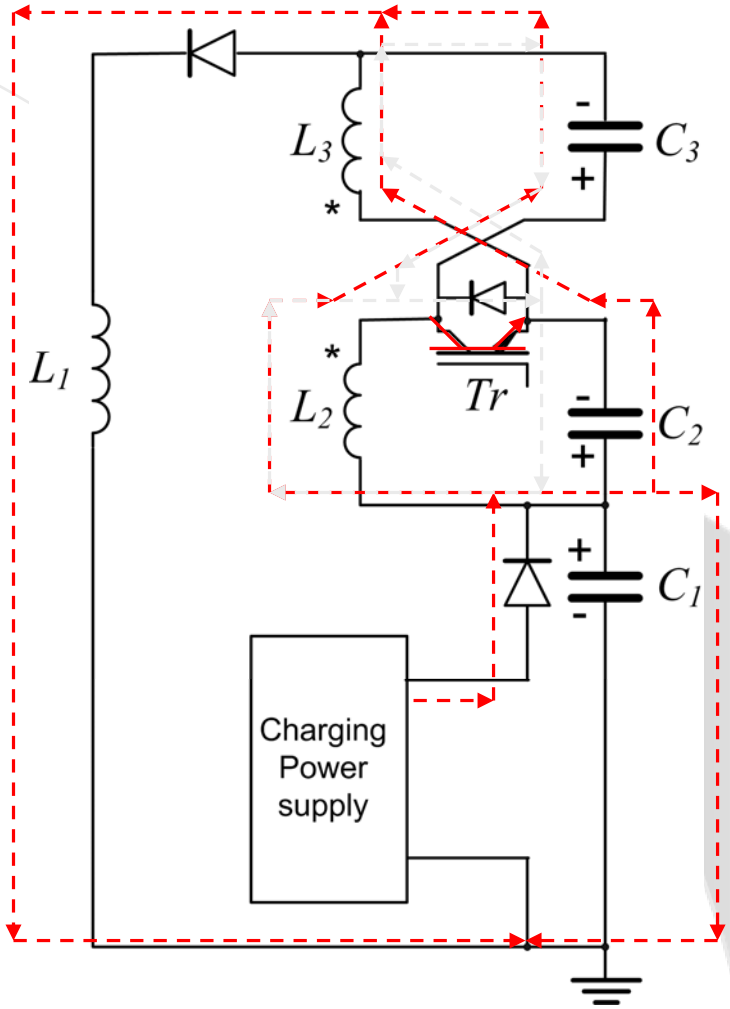

Proposed topology:

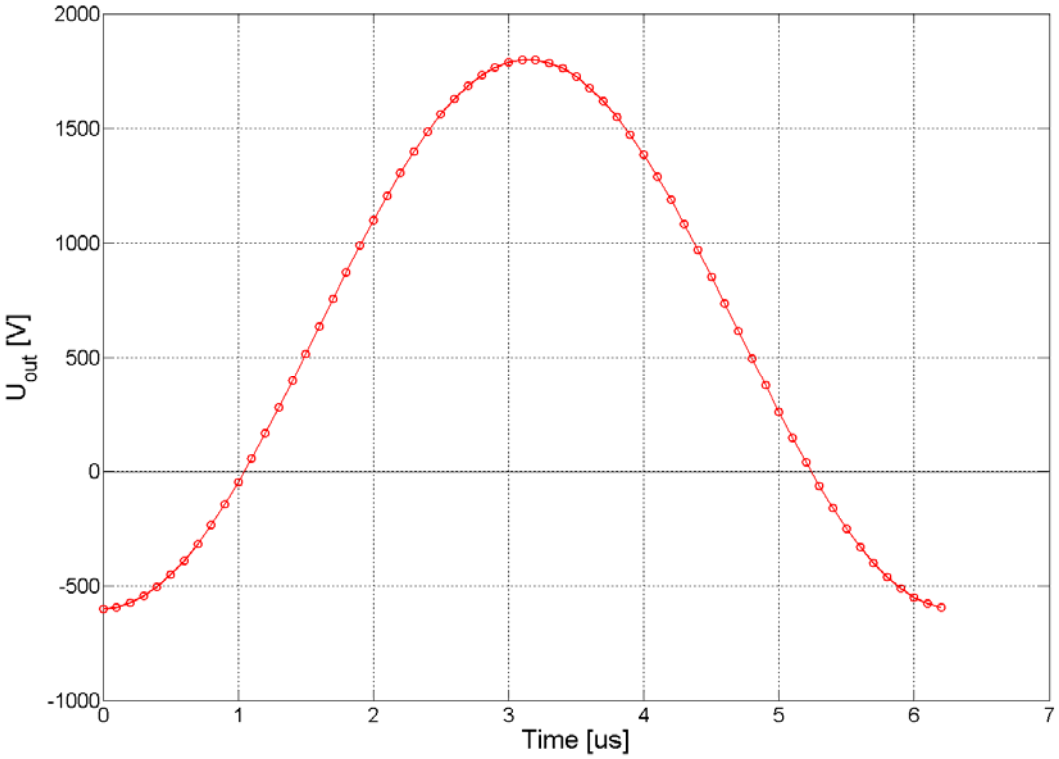

$$U_{out} = U_i\left(1 - 2\cos\omega t\right)$$

$$U_{out(\max)} = 3 \cdot U_i \cdot n$$

U_i – initial voltage

n – number of stages

Simulations led for U_i = 600V

Measurement

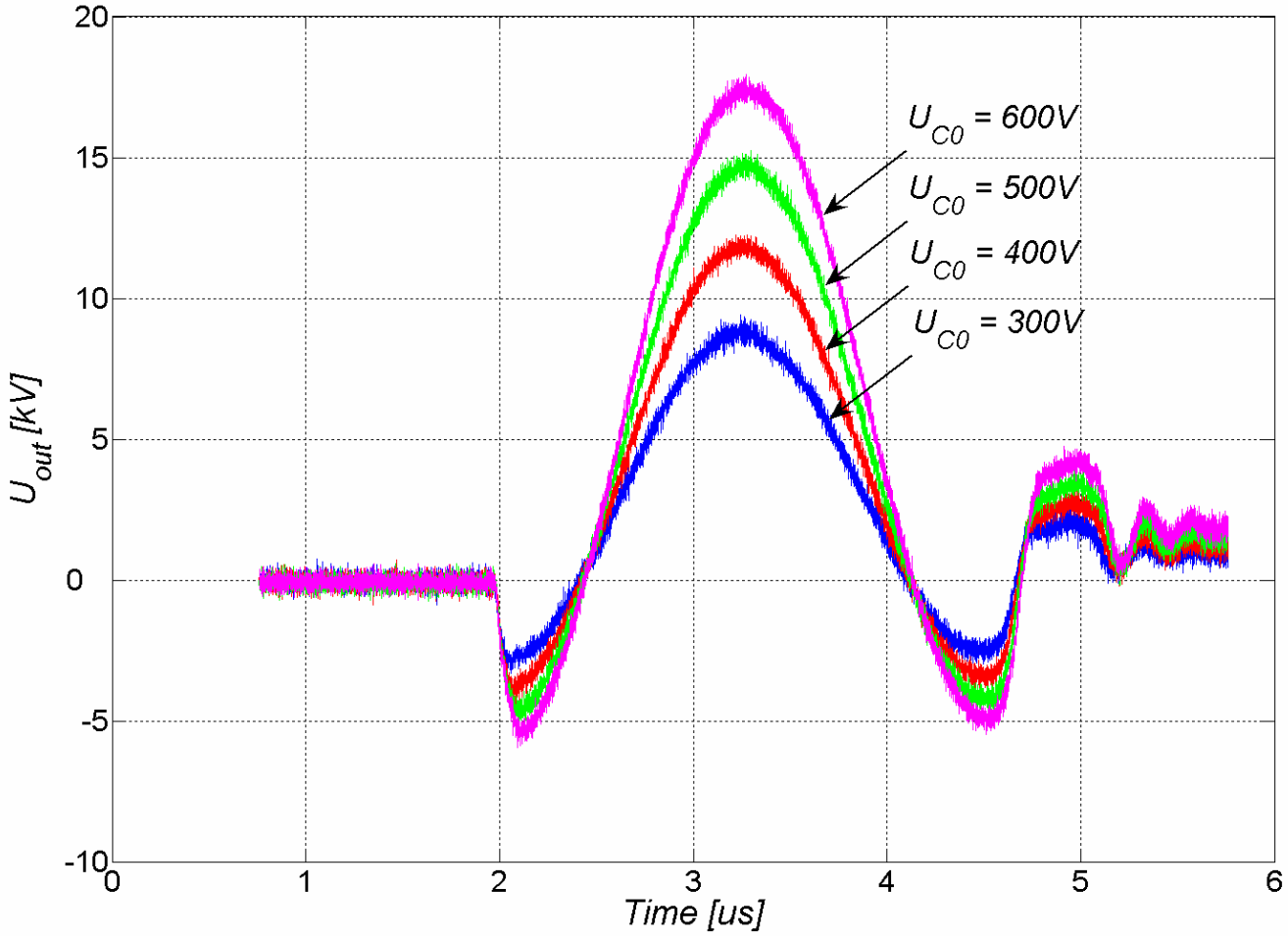

Measurements were led using LeCroy WaveRunner 6100A digital oscilloscope, PPE 20kV voltage probe and Fluke ISM 5010 current shunt

Practical conversion factor per stage *f=2,88*

Maximal voltage for 600V supply: 17,3 kV

Measurement results:

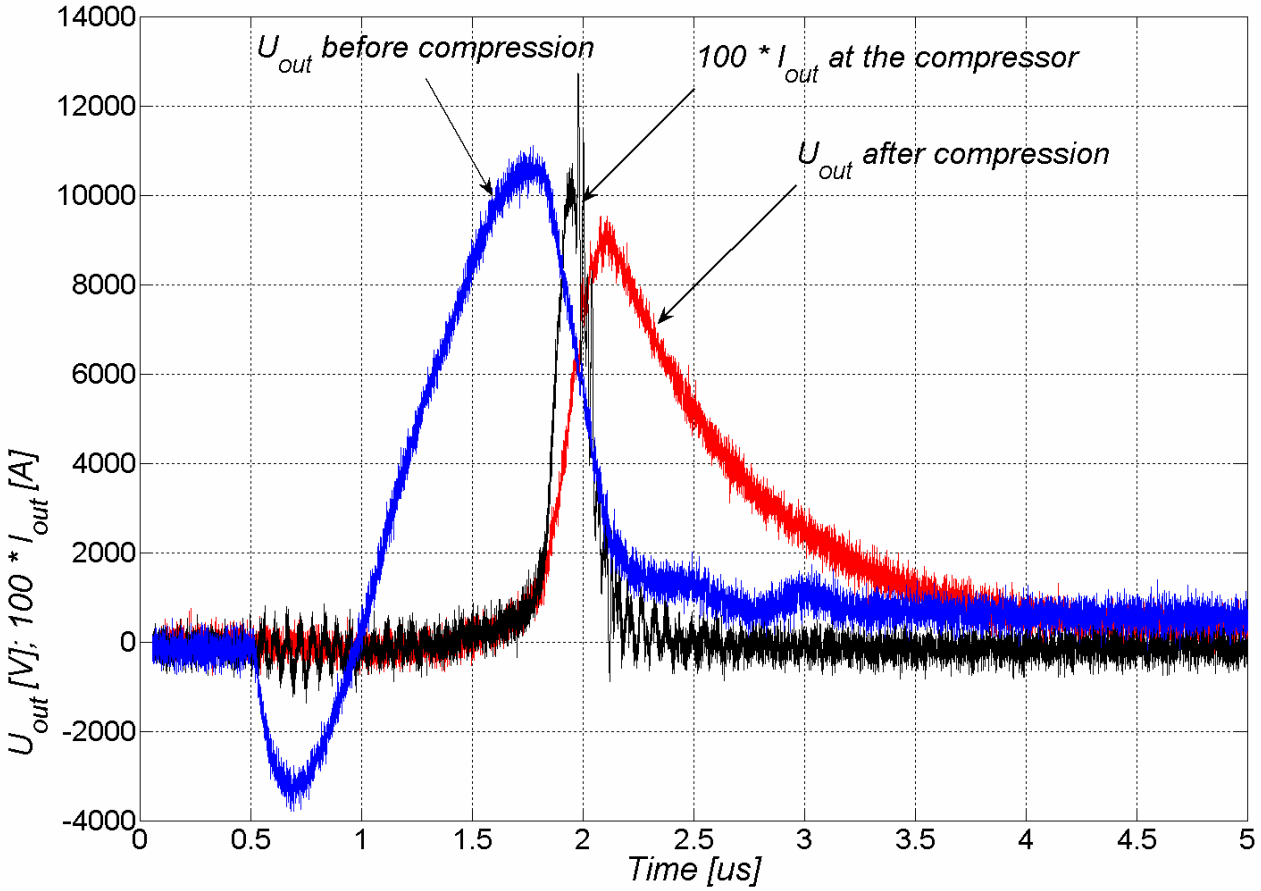

Single stage magnetic compressor;

Rise time compression from 690ns to 300ns (2,3 times)

Lecture outline

- Introduction
- Plasma sources – low pressure and one atmosphere pressure systems
- Typical reactor configurations – already done !
- Plasma reactor as electric load – equivalent circuit
- Power supply system configurations
- Efficiency and power measurement systems and circuits
- Summary

In case of AP systems usually four major approaches are used.

1. Analytical approach: uses empirical knowledge in order to estimate the amount of power delivered to reactor systems. Electrochemical scientists established such equations quite early (Manley's equation) but it is often problematic to measure or estimate parameters necessary for calculations, moreover they tend to drift as a function of voltage and time.

$$P = 4U_{ig}C_D f\left[U_{peak} - \left(\frac{C_D - C_G}{C_D}\right)U_{ig}\right]$$

where U_{ig} – critical voltage, f – supply voltage frequency, U_{peak} – supply voltage peak value.

2. Power calculation based on momentary voltage – current waveform. Simple and adequate in case of pulsed and DC systems, gives precise results. Enables single pulse energy measurement on case of pulsed systems. Still, in case of filamentary discharges the measurement os problematic due to extreme short duration of singular pulses, and large distortion of measurement signals (see figure).

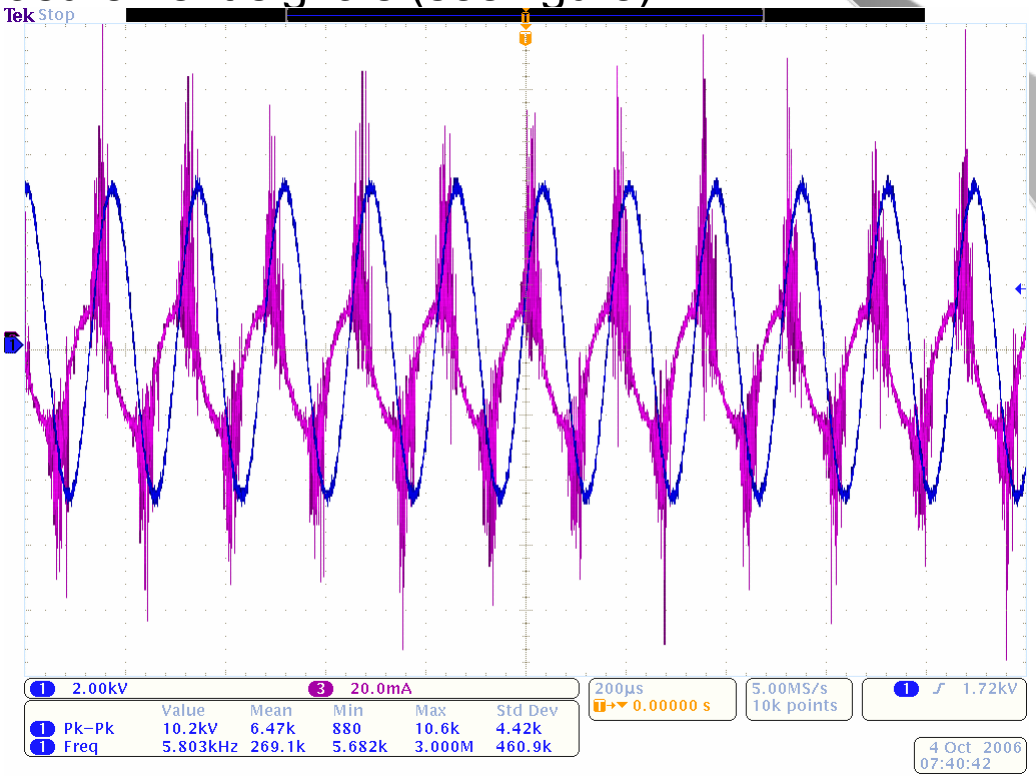

3. Lissajous curve approach. These parallelograms present charge – voltage dependency. The area of the figure can be recalculated into energy (power) and in addition give the possibility to calculate reactor's capacitances.

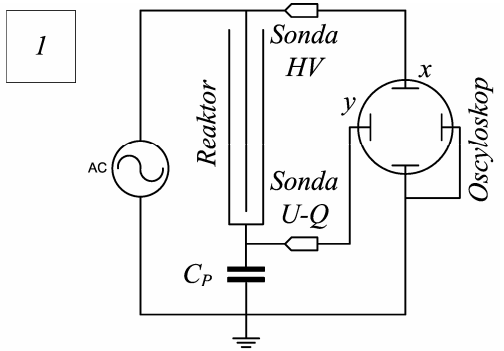

$$E = \oint_T U(t)\frac{dQ}{dt}dt = C_P \oint U(t)dU_P$$

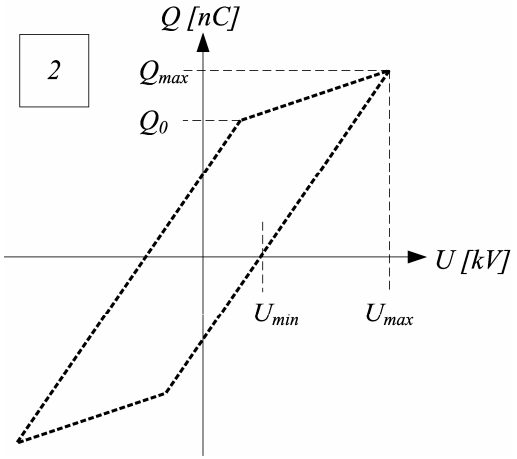

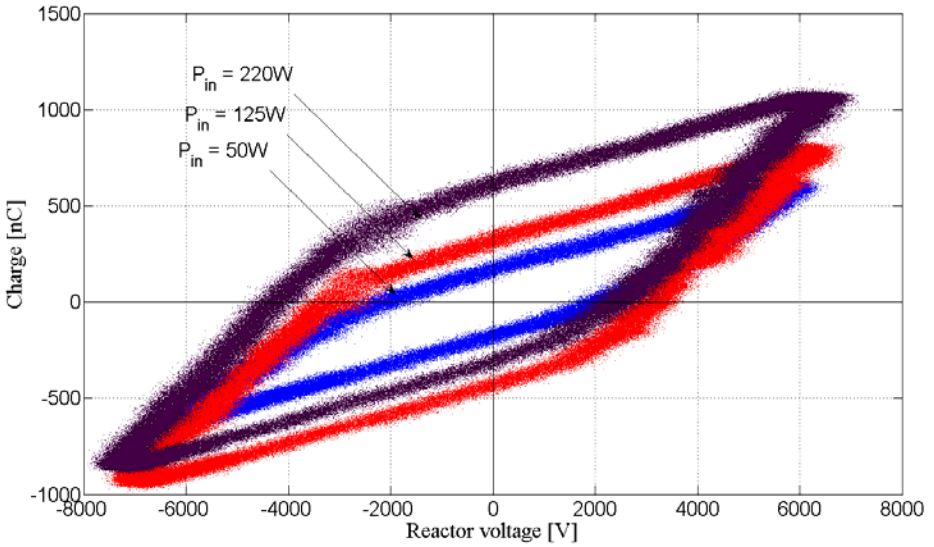

Efficiency and power measurement systems and circuits

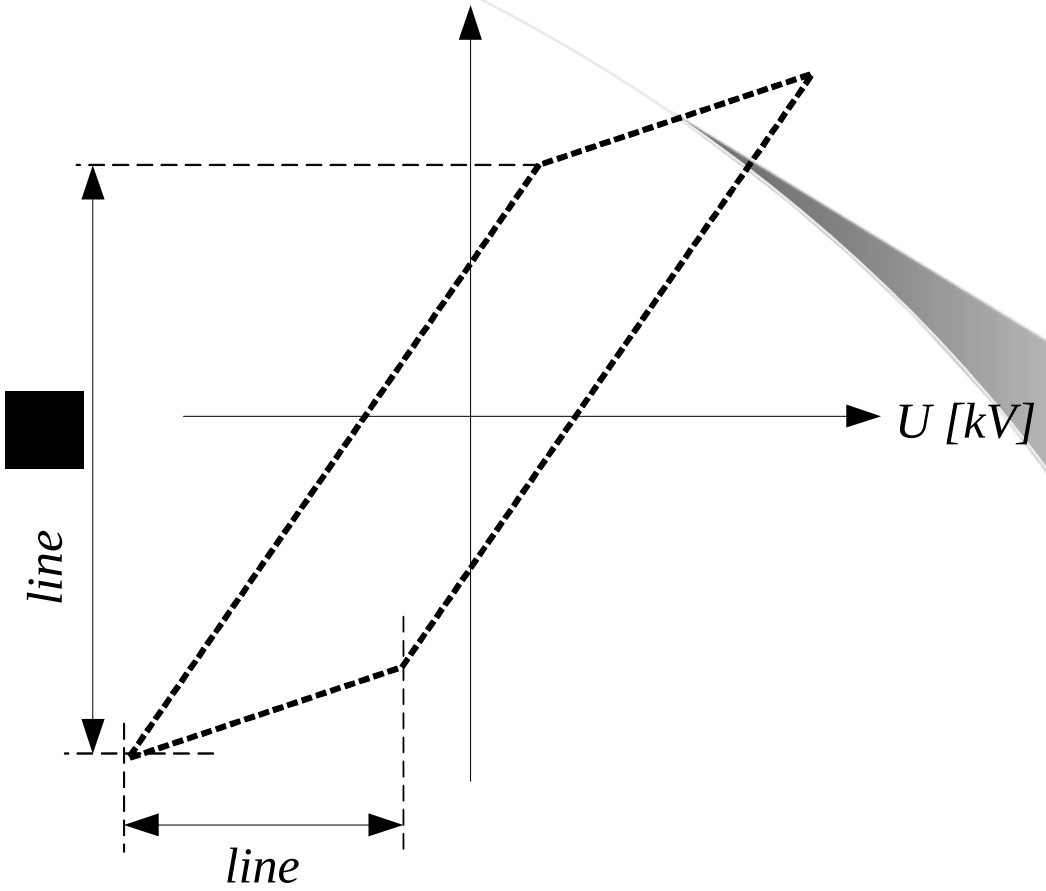

$$C_R = \frac{C_D C_G}{C_D + C_G}$$

4. Differential measurement. Output power is measured while supplying a plasma reactor and a HV capacitor (bank) with comparable capacitance. Then, assuming supply system's efficiency does not change, the power difference is assumed to be connected with plasma system energy delivery.

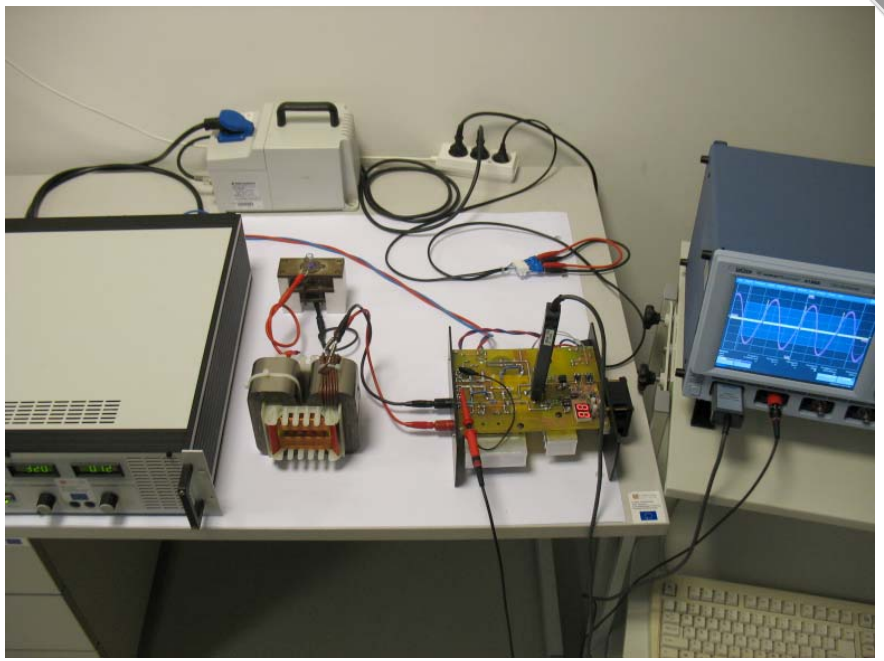

Efficiency and power measurement systems and circuits

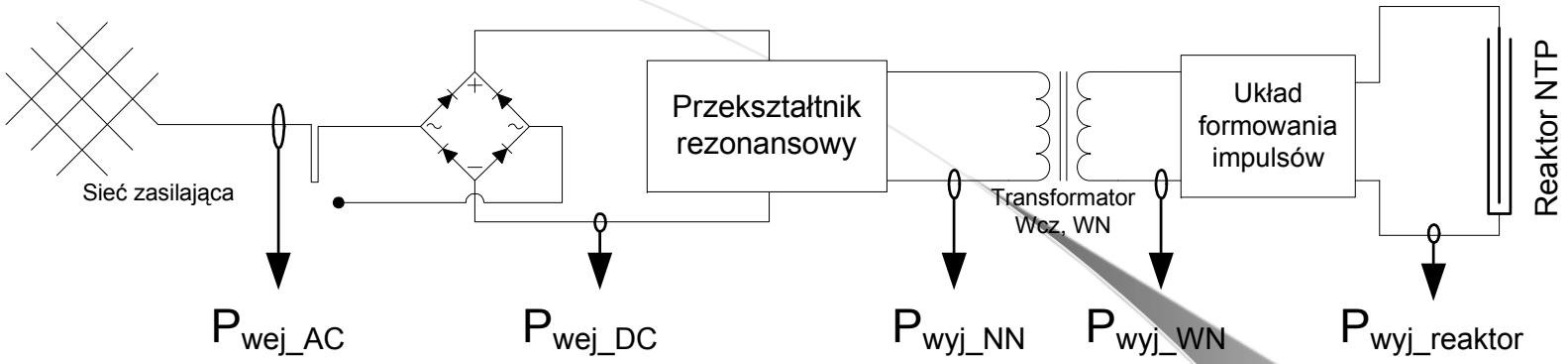

$$\eta = \frac{P_{out}}{P_{in}}$$

Efficiency and power measurement systems and circuits

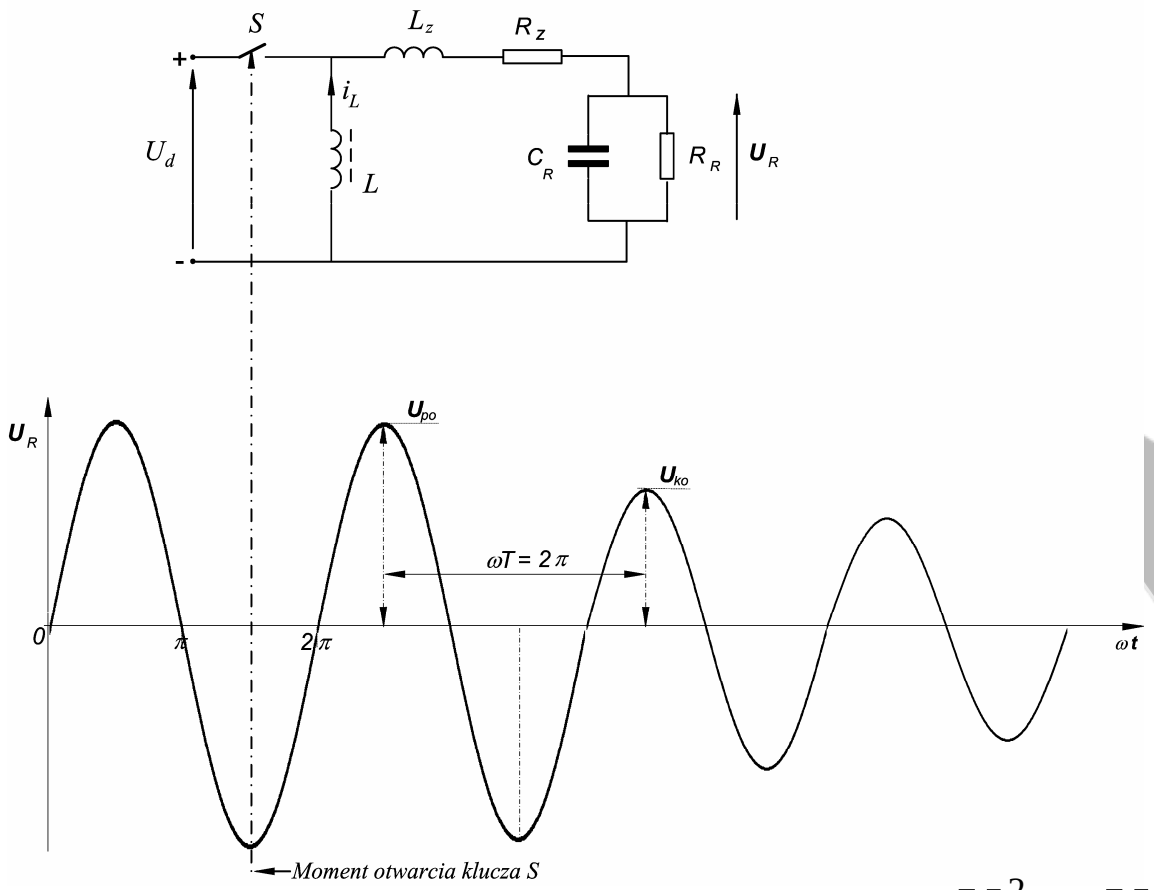

$$\eta = 1 - \frac{U_{po}^2 - U_{ko}^2}{U_{po}^2}$$

Lecture outline

- Introduction
- Plasma sources – low pressure and one atmosphere pressure systems
- Typical reactor configurations – already done !
- Plasma reactor as electric load – equivalent circuit
- Power supply system configurations
- Efficiency and power measurement systems and circuits
- Summary

Summary

Experts estimate that, in Germany alone, sales of products that owe their existence to plasma technology now amount to about 45 billion Euro per year; worldwide the annual value is placed at about ***500 billion Euro***.

In 1995 worldwide sales of such products were approximately seven billion Euro; in 2005 they are expected to reach 27 billion Euro. This represents an average growth rate of ***15 %***. In Germany alone, well over 200 companies are active in the field of low-temperature plasma technology.

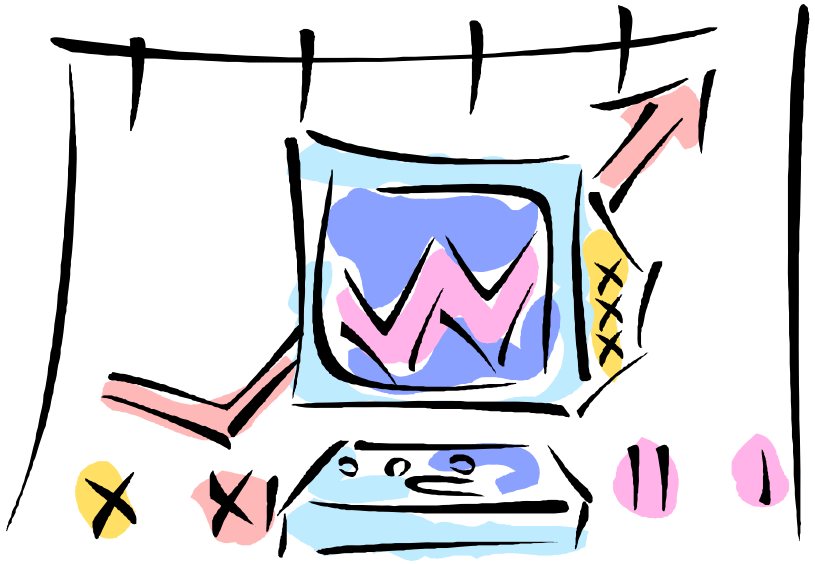

Source: German Ministry Report: Plasma Technology Process Diversity + Sustainability , nov 2001

Summary

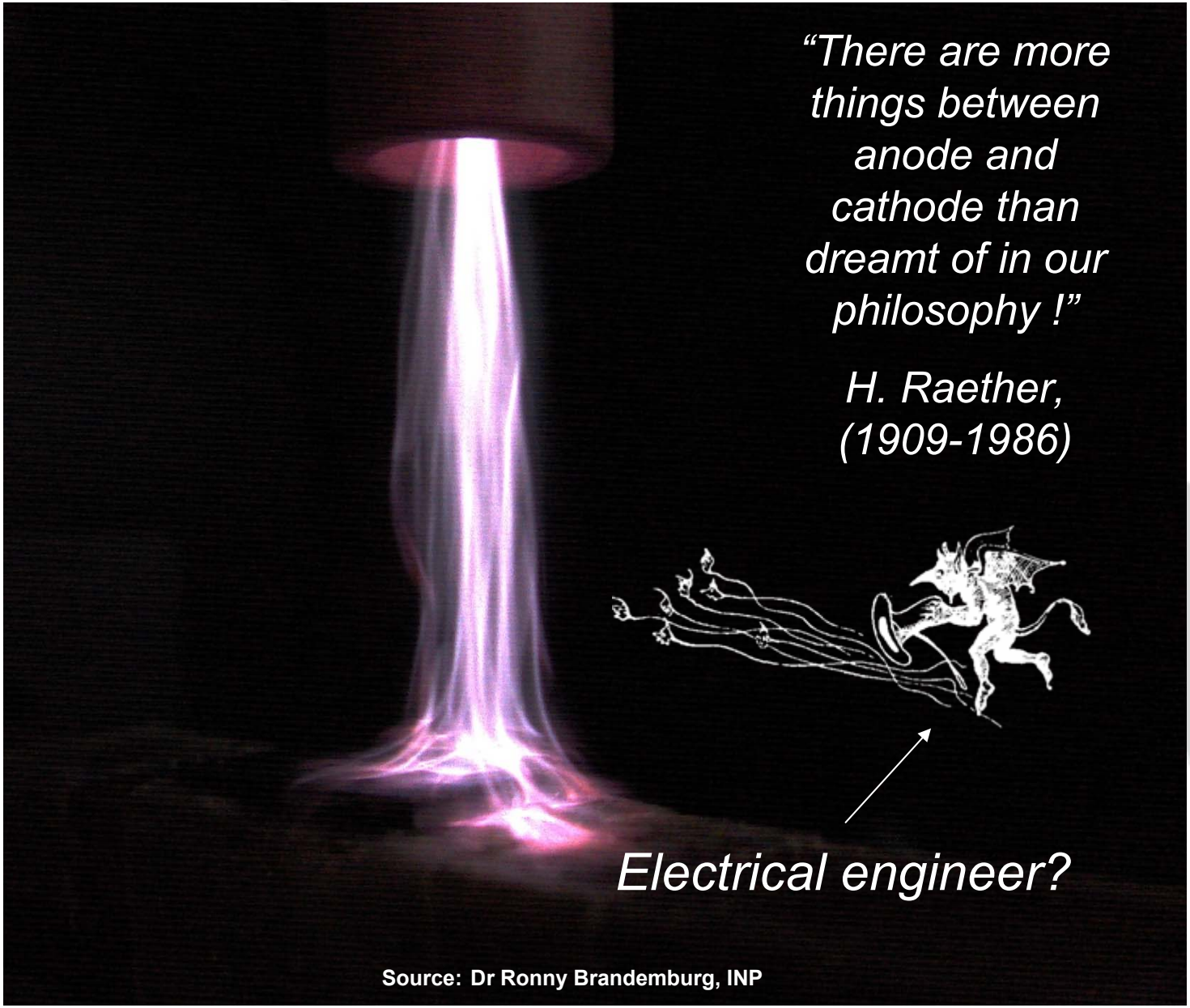

Source: Dr Ronny Brandemburg, INP

Zachodniopomorski
Uniwersytet Technologiczny
w Szczecinie

BALTICNET
PLASMATEC

KompetenznetzeDeutschland
networking for innovation

Plasma Sources

PhD Marcin Hołub

Wydział
Elektryczny

Summer School, Greifswald, 19th August 2010